Installation instructions:

502006

AKRAPOVIC SLIP-ON EXHAUST SYSTEM
for the
SUZUKI RM-Z450

Congratulations on purchasing an Akrapovic exhaust system. Please read these installation instructions carefully. If you have any trouble installing the system please contact your authorized dealer!

IMPORTANT INFORMATION

Exclusion of Certain Liability

1. The manufacturer, importer or dealer shall not be liable for any incidental damage including personal injury or any other damages caused by improper installation or operation of the Akrapovic exhaust system. When installing the Akrapovic exhaust system be careful that the exhaust system does not touch other parts sensitive to high temperature.

2. Akrapovic makes no representation or warranties with regard to damage caused by the improper installation, use and maintenance of the Akrapovic exhaust system. The warranty is limited to defects recognized by our technical department and to normal use, and excludes items subject to normal wear (gaskets and damping wool). The guarantee is void in case of accident, modification, improper or competition use.

3. Do not attempt to install the Akrapovic exhaust system on a motorcycle for which it was not made or tested by Akrapovic.

4. When the exhaust system gets very hot during operation, be careful not to burn yourself on the exhaust system or parts which are in direct contact with it, even when the motor is not running. Also protect other people, especially children, from the injuries mentioned above.

5. In some cases Akrapovic exhaust system kits contain chemical products (ceramic anti-seizing grease; bolt sealant). Handle with care, do not inhale or swallow. Avoid excessive contact with skin, eyes or mucous membranes. Keep out of reach of children.

6. Technical specifications of Akrapovic exhaust systems and related products subject to change without notice.

Trademarks

The Akrapovic Exhaust System Technology logo is a registered trademark of Akrapovic d.d.

Akrapovic website

Information about Akrapovic exhaust systems and related products is available on the Akrapovic website at:
http://www.akrapovic.com/

Copyright

No part of the Akrapovic exhaust system or its documentation may be reproduced or distributed in any form or by any means without the prior written authorization of the Akrapovic company.

© Akrapovic, d.d. All rights reserved.

Symbols

The following symbols are used throughout these installation instructions:

! CAUTION OR WARNING	INSTALLATION TIP
TOOLS REQUIRED	TIGHTENING TORQUE



USE BOLT SEALANT; Apply 1 to 2 small drops of bolt sealant onto the cleaned and deagreased threads before tightening bolts. **WARNING! Avoid contact with skin, eyes and mucous membranes. Do not inhale fumes. Keep out of the reach of children.**



USE ANTI-SEIZING GREASE (white tube); Prevents seizing, corrosion and excessive wear between the titanium components of your exhaust system. **WARNING! Avoid eye contact. Avoid excessive skin contact. Keep out of the reach of children.**



USE ANTI-SEIZE LEAD-FREE COPPER PASTE (black tube); Provides trouble-free and long-lasting protection against seizing, corrosion and rusting of bolts, threaded ends, nuts, joints, etc. Also protects against vibration, wear and impact. **WARNING! Avoid eye contact. Avoid excessive skin contact. Keep out of the reach of children.**

INSTALLATION INSTRUCTIONS

BEFORE INSTALLING CHECK SCHEMATIC OF THE EXHAUST SYSTEM!

! IF ANY ITEMS IN THE AKRAPOVIC EXHAUST SYSTEM PACKAGE ARE MISSING PLEASE CONTACT YOUR AUTHORIZED DEALER. KEEP THE SCHEMATIC FOR FUTURE REFERENCE.

! THESE INSTALLATION INSTRUCTIONS MUST BE READ CAREFULLY IN ORDER TO ENSURE PROPER INSTALLATION AND OPERATION OF THE AKRAPOVIC EXHAUST SYSTEM.

! THE EXHAUST SYSTEM CAN BE EXTREMELY HOT. ALLOW THE MOTORCYCLE TO COOL DOWN BEFORE BEGINNING INSTALLATION.

WE ADVISE YOU TO LEAVE INSTALLATION TO A QUALIFIED SERVICEMAN. IMPROPER INSTALLATION MAY RESULT IN A SHORTER LIFETIME OF THE EXHAUST SYSTEM AND/OR DAMAGE TO THE MOTORCYCLE.



T-handle 8mm wrench
T-handle 10mm wrench
T-handle 12mm wrench
T-handle 13mm wrench
T-handle 4mm three hexagon key wrench
T-handle 5mm three hexagon key wrench
T-handle 6mm three hexagon key wrench

REMOVAL OF STOCK EXHAUST SYSTEM

1. Put the motorcycle on a side stand, we recommend a racing stand.
2. For easier access to the muffler remove the rear right side panel **(Figure 1, 2).**



Figure 1



Figure 2

3. Unscrew the bolt from the metal clamp at the link pipe – header tube joint and the link pipe bracket bolt **(Figure 3, 4).**



Figure 3



Figure 4

4. Unscrew and remove the muffler bracket bolt and remove the muffler together with the link pipe **(Figure 5, 6).**



Figure 5



Figure 6

INSTALLATION OF THE AKRAPOVIC SLIP-ON EXHAUST SYSTEM

1. Install additional Akrapovic muffler bracket **(Figure 7, 8).**



Figure 7



Figure 8

2. Install graphite sleeve gasket into the inlet of the link pipe **(Figure 9).** Coat the bolt and interior of the metal clamp with Akrapovic anti-seize lead-free copper paste (black tube) and correctly install the metal clamp onto the link pipe **(Figure 10).**



Figure 9



Figure 10

3. Correctly position the carbon-fiber clamps and slide them onto the muffler - bear in mind the left offset of the carbon-fiber clamps viewed from the rear. !**<u>WARNING:</u> open the clamps to slightly wider than the diameter of the outer sleeve of the muffler – do not scrape them along the muffler outer sleeve! (Figure 11, 12).**



Figure 11



Figure 12

4. Correctly position the muffler with welded link pipe and slide it onto the stock header tube **(Figure 13).** Hand tighten the bolt of the link pipe hanging bracket **(Figure 14).**



Figure 13



Figure 14

5. Attach the carbon-fiber clamps to the Akrapovic chassis hanging bracket – use the bolts, washers and spacers supplied in the Akrapovic kit. Do not fully tighten. Make sure the additional parts from the Akrapovic kit are correctly installed **(Figure 15, 16, 17).** Make sure the link pipe and muffler are not touching the engine, frame or any other part of the motorcycle.



Figure 15



Figure 16



Figure 17

6. Align the muffler in respect to the motorcycle and fully tighten the bolts of the muffler clamps, link pipe bracket and metal clamp **(Figure 18, 19, 20, 21).**



Figure 18

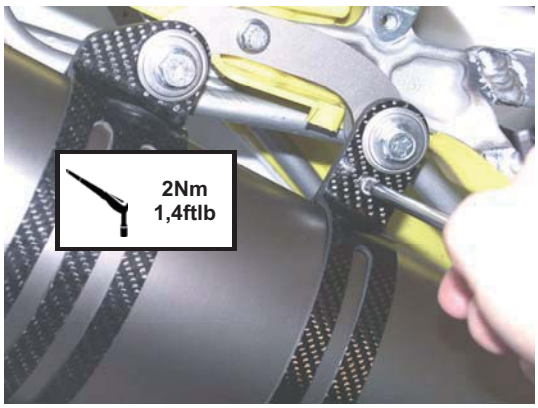

Figure 19

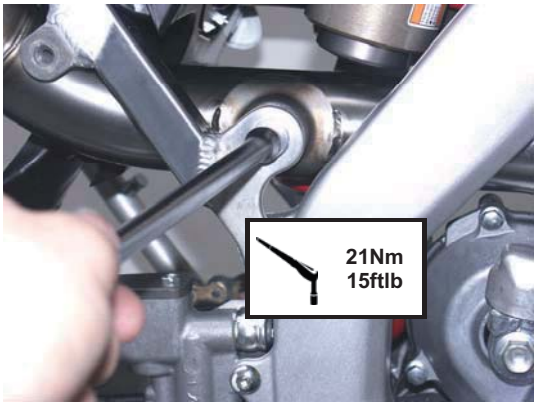

Figure 20

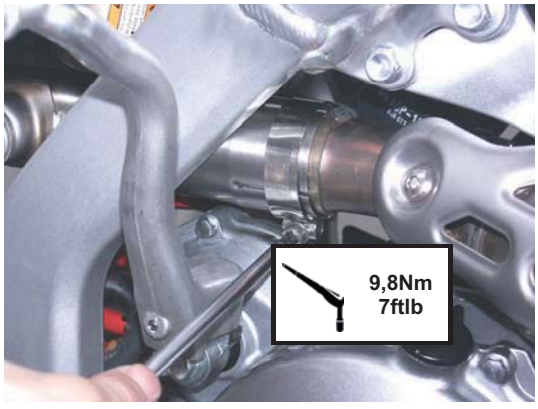

Figure 21

7. Cut off the inside of the right side panel as shown **(Figure 22, 23).** Reattach the rear side panel **(Figure 24, 25).**



Figure 22



Figure 23



Figure 24

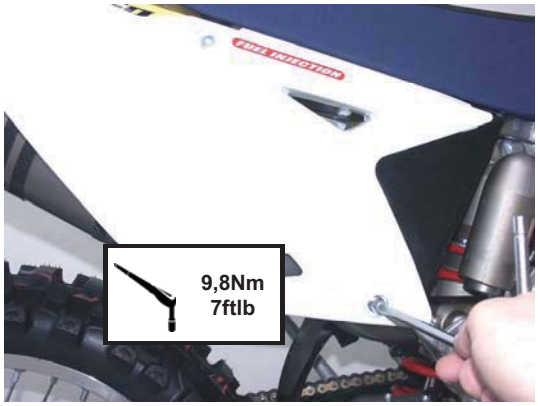

Figure 25

Final installation:

1. Clean grease spots:
    a. Muffler – titanium outer sleeve: use a soft cloth sprayed with a multi-purpose spray lubricant (WD-40 or equivalent)
    b. Stainless steel link pipe: use a soft cloth sprayed with a contact cleaner, then wipe with a soft dry cloth

    Cleaning will prevent spots from burning onto the surface. Do not use aggressive chemical cleaners, because they can damage the sticker.

2. Position of the correctly installed Akrapovic **SLIP-ON** system **(Figure 26).**



Figure 26

3. **Check the operation of the brakes and suspension. Make sure all the bolts are sufficiently tightened. In case the exhaust system touches the cowling or other parts repeat the adjustment of the exhaust system or contact your authorized dealer.**

!	**IT IS NORMAL IF WHITE SMOKE COMES OUT OF THE MUFFLER ON FIRST OPERATION.**
!	**DO NOT STAND BEHIND THE MUFFLER ON FIRST OPERATION.**
!	**DO NOT USE AUTOMOTIVE WHEEL CLEANERS OR ANY CLEANING PRODUCTS WHICH CONTAIN ACIDIC ADDITIVES TO CLEAN AKRAPOVIC EXHAUST SYSTEMS.**

MAINTENANCE OF THE AKRAPOVIC EXHAUST SYSTEM

1. Clean the titanium exhaust components with a multi-purpose spray lubricant (WD-40 or equivalent), carbon fiber exhaust components with soft and dry cloth and stainless steel components with soft cloth sprayed with contact cleaner, then wipe with soft and dry cloth. Do not use aggressive chemical cleaners, because they can damage the sticker. A change in the color of the exhaust system is normal due to the high temperatures.
2. The wearing out of the muffler silencing material depends on the type of the motor and riding style. Contact your dealer/serviceman if visible changes appear on muffler's outer sleeve or the noise level is increased.
3. Periodically make sure all the bolts and springs are sufficiently tight.

SUZUKI RMZ 450/ SLIP-ON Exhaust System with Spark Arrester

Product code: S-S4SO6-DTA

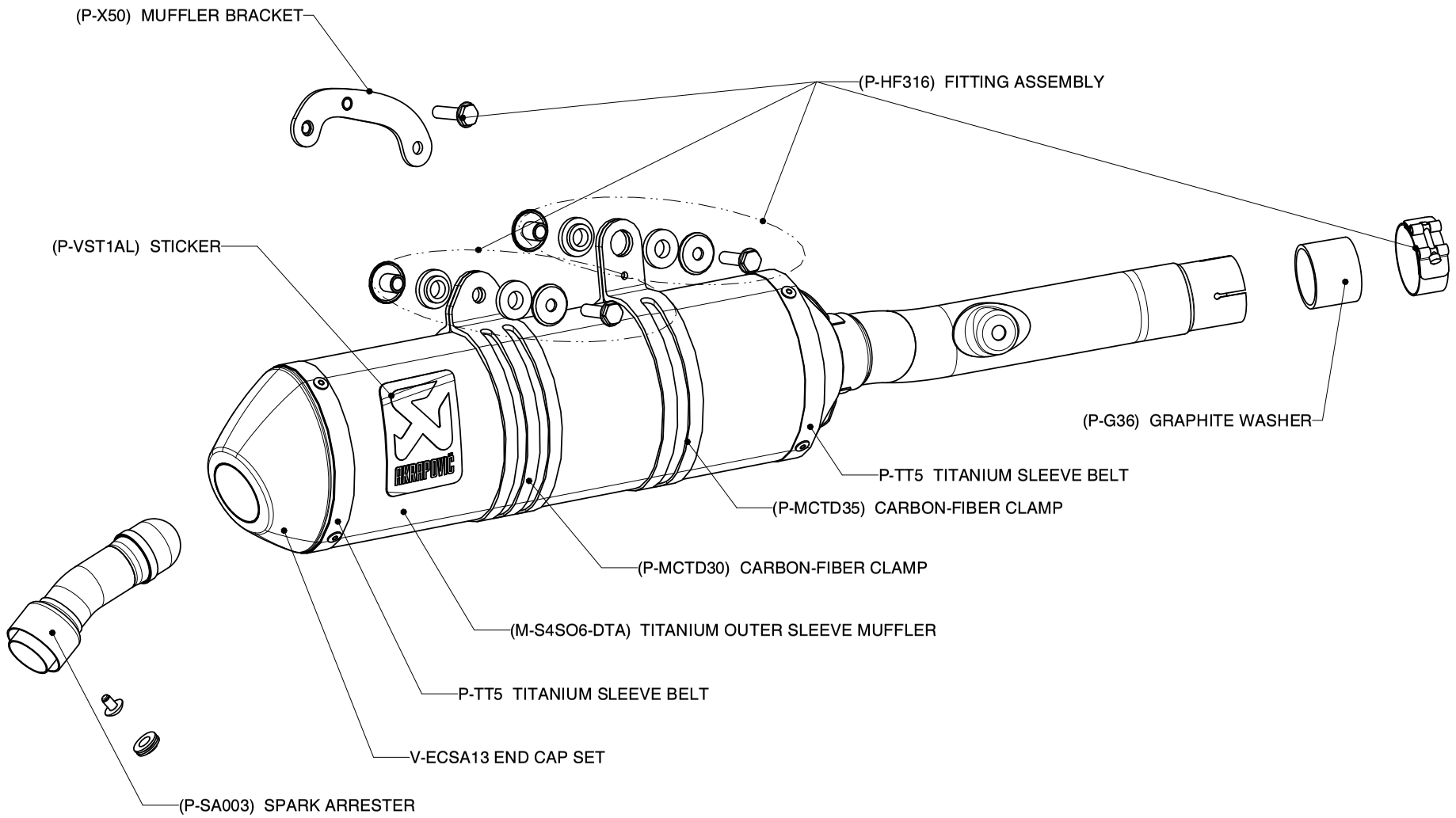

MUFFLER REPAIR KITS	
KIT	Part Nr.
REPACK	P-RPCK12
SLEEVE	P-RKS208DT42