AKRAPOVIC RACING & EVOLUTION EXHAUST SYSTEM
for the
SUZUKI RM-Z450 (2006-2007)

Congratulations on purchasing an Akrapovic exhaust system. Please read these installation instructions carefully. If you have any trouble installing the system please contact your authorized dealer!

IMPORTANT INFORMATION

Exclusion of Certain Liability

1. The manufacturer, importer or dealer shall not be liable for any incidental damage including personal injury or any other damages caused by improper installation or operation of the Akrapovic exhaust system. When installing the Akrapovic exhaust system be careful that the exhaust system does not touch other parts sensitive to high temperature.

2. Akrapovic makes no representation or warranties with regard to damage caused by the improper installation, use and maintenance of the Akrapovic exhaust system. The warranty is limited to defects recognized by our technical department and to normal use, and excludes items subject to normal wear (gaskets and damping wool). The guarantee is void in case of accident, modification, improper or competition use.

3. Do not attempt to install the Akrapovic exhaust system on a motorcycle for which it was not made or tested by Akrapovic.

4. When the exhaust system gets very hot during operation, be careful not to burn yourself on the exhaust system or parts which are in direct contact with it, even when the motor is not running. Also protect other people, especially children, from the injuries mentioned above.

5. In some cases Akrapovic exhaust system kits contain chemical products (ceramic anti-seizing grease; bolt sealant). Handle with care, do not inhale or swallow. Avoid excessive contact with skin, eyes or mucous membranes. Keep out of reach of children.

6. Technical specifications of Akrapovic exhaust systems and related products subject to change without notice.

Trademarks

The Akrapovic Exhaust System Technology logo is a registered trademark of Akrapovic d.d.

Akrapovic website

Information about Akrapovic exhaust systems and related products is available on the Akrapovic website at:
http://www.akrapovic-exhaust.net/

Copyright

No part of the Akrapovic exhaust system or its documentation may be reproduced or distributed in any form or by any means without the prior written authorization of the Akrapovic company.

© Akrapovic, d.d. All rights reserved.

Symbols

The following symbols are used throughout these installation instructions:

! CAUTION OR WARNING

INSTALLATION TIP

TOOLS REQUIRED

TIGHTENING TORQUE

INSTALLATION INSTRUCTIONS

BEFORE INSTALLING CHECK SCHEMATIC OF THE EXHAUST SYSTEM!

! IF ANY ITEMS IN THE AKRAPOVIC EXHAUST SYSTEM PACKAGE ARE MISSING PLEASE CONTACT YOUR AUTHORIZED DEALER. KEEP THE SCHEMATIC FOR FUTURE REFERENCE.

! THESE INSTALLATION INSTRUCTIONS MUST BE READ CAREFULLY IN ORDER TO ENSURE PROPER INSTALLATION AND OPERATION OF THE AKRAPOVIC EXHAUST SYSTEM.

! THE EXHAUST SYSTEM CAN BE EXTREMELY HOT. ALLOW THE MOTORCYCLE TO COOL DOWN BEFORE BEGINNING INSTALLATION.

WE ADVISE YOU TO LEAVE INSTALLATION TO A QUALIFIED SERVICEMAN. IMPROPER INSTALLATION MAY RESULT IN A SHORTER LIFETIME OF THE EXHAUST SYSTEM AND/OR DAMAGE TO THE MOTORCYCLE.

T-handle 8mm wrench
T-handle 12mm wrench
T-handle 13mm wrench
T-handle 6mm three hexagon key wrench
Spring puller

REMOVAL OF STOCK EXHAUST SYSTEM

1. Put the motorcycle on a side stand, we recommend a racing stand.
2. For easier access to the muffler remove the rear right panel **(Figure 1, 2).**



Figure 1



Figure 2

3. Unscrew the bolt from the metal clamp at the link pipe – header tube joint **(Figure 3).**

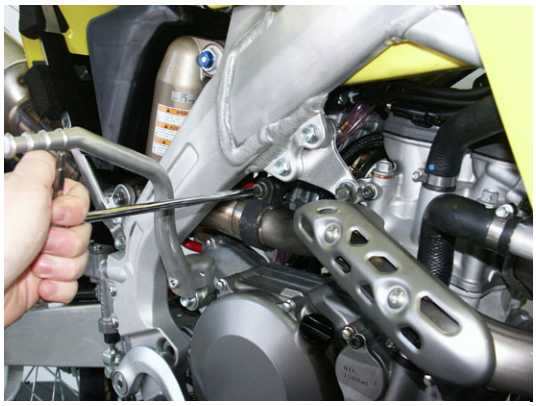

Figure 3

4. Unscrew and remove the bolt from the metal bracket for the link pipe **(Figure 4).**

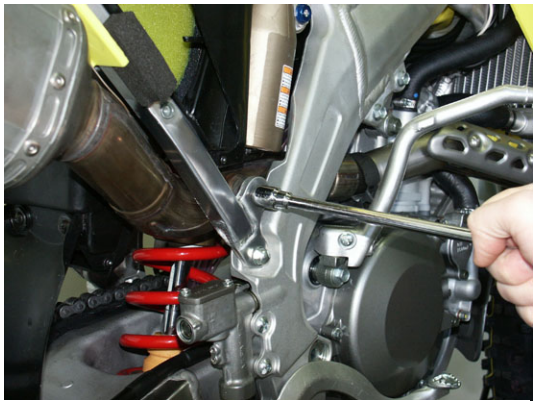

Figure 4

5. Unscrew and remove the bolt from the muffler metal bracket **(Figure 5).**



Figure 5

6. Remove the muffler together with the link pipe **(Figure 6).**



Figure 6

7. Unscrew and remove the bolts on the flange of header tube and remove the stock header tube **(Figure 7, 8).**



Figure 7

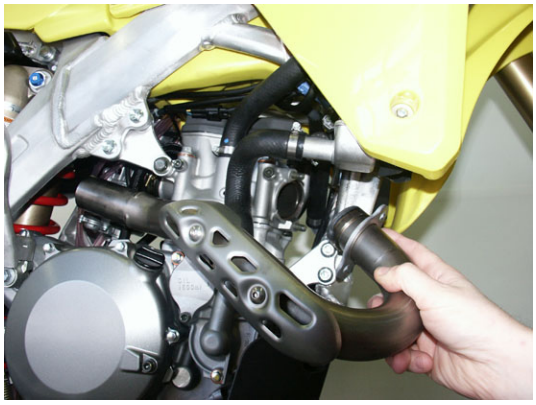

Figure 8

INSTALLATION OF THE AKRAPOVIC RACING OR EVOLUTION EXHAUST SYSTEM

installing the header tube:

1. Correctly position and install the Akrapovic carbon-fiber heat shield onto the header tube; make sure the heat / distance washers are correctly installed **(Figure 9, 10, 11).**



Figure 9



Figure 10

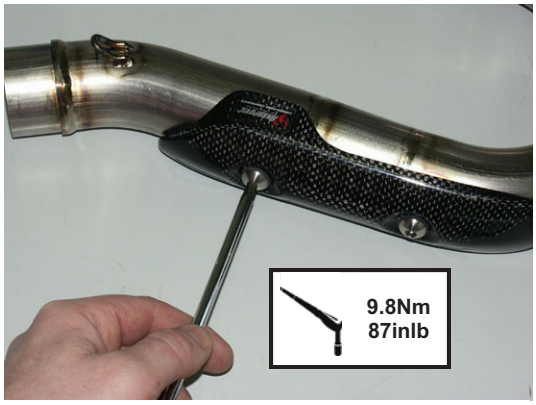

Figure 11

2. Set up the inner sleeve together with the flange and springs; make sure they are correctly oriented; use stock gasket; hand tighten the flange; **(Figure 12, 13).**



Figure 12

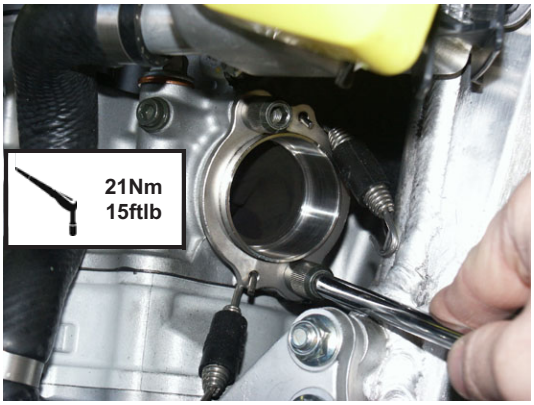

Figure 13

3. Install the header tube **(Figure 14).**

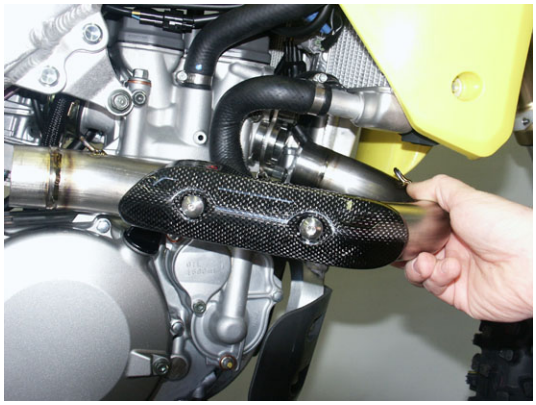

Figure 14

4. Attach the springs **(Figure 15).**



Figure 15

installing the link pipe with welded muffler:

1. Correctly position the carbon-fiber clamp and slide it onto the muffler - bear in mind the left offset of the carbon-fiber clamp viewed from the rear. WARNING: open the clamp to slightly wider than the diameter of the outer sleeve of the muffler – do not scrape it along the muffler outer sleeve! **(Figure 16, 17).**



Figure 16



Figure 17

2. **For evolution exhaust only:** coat the interior side of the input of the titanium link pipe with Akrapovic ceramic anti-seizing grease (white tube).
3. Correctly position the muffler with the link pipe and slide them onto the header tube **(Figure 18).**



Figure 18

4. Attach the spring at the link pipe – header tube joint **(Figure 19).**



Figure 19

5. **For the 2006 model only:** tighten the stock bolt of the link pipe hanging bracket ; **For the 2007 model only:** tighten the Akrapovic bolt and **collar A** of the link pipe hanging bracket **(Figure 20).**

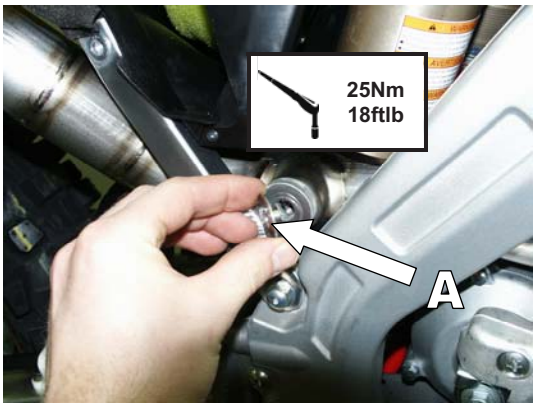

Figure 20

6. Attach the carbon-fiber clamp to the stock chassis hanging bracket – use the bolts, washer and spacers supplied in the Akrapovic kit. Do not fully tighten. Make sure the additional parts from the Akrapovic kit are correctly installed. **(Figure 21, 22, 23, 24).**



Slika 21



Figure 22



Figure 23



Figure 24

7. Make sure the link pipe and header tube are not touching the engine or frame.

final installation:

1. Tighten fully the bolts of the muffler clamp, link pipe bracket and header tube flange
2. Clean grease spots:
    a. Muffler – titanium outer sleeve: use a soft cloth sprayed with a multi-purpose spray lubricant (WD-40 or equivalent).
    b. Muffler – carbon-fiber outer sleeve: use a soft dry cloth.
    c. RACING - stainless steel link pipe, header tube: use a soft cloth sprayed with a contact cleaner, then wipe with a soft dry cloth.
    d. EVOLUTION - titanium link pipe, header tube: use a soft cloth sprayed with a multi-purpose spray lubricant (WD-40 or equivalent).

    Cleaning will prevent spots from burning onto the surface. Do not use aggressive chemical cleaners, because they can damage the sticker.
3. Reattach the rear panel **(Figure 25).**

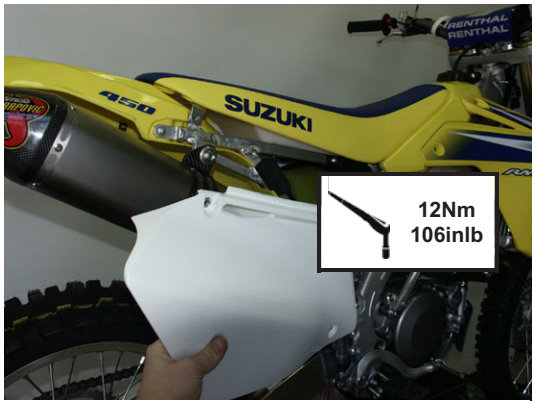

Figure 25

4. **WARNING: after running engine for 30 minutes, tighten the bolts on the Akrapovic carbon-fiber heat shield !**
5. Position of the correctly installed Akrapovic RACING or EVOLUTION system **(Figure 26).**



Figure 26

6. **Check the operation of the brakes and suspension. Make sure all the bolts are sufficiently tightened. In case the exhaust system touches the cowling or other parts repeat the adjustment of the exhaust system or contact your authorized dealer.**

! IT IS NORMAL IF WHITE SMOKE COMES OUT OF THE MUFFLER ON FIRST OPERATION.

! DO NOT STAND BEHIND THE MUFFLER ON FIRST OPERATION.

! DO NOT USE AUTOMOTIVE WHEEL CLEANERS OR ANY CLEANING PRODUCTS WHICH CONTAIN ACIDIC ADDITIVES TO CLEAN AKRAPOVIC EXHAUST SYSTEMS.

MAINTENANCE OF THE AKRAPOVIC EXHAUST SYSTEM

1. Clean the titanium exhaust components with a multi-purpose spray lubricant (WD-40 or equivalent), carbon fiber exhaust components with soft and dry cloth and stainless steel components with soft cloth sprayed with contact cleaner, then wipe with soft and dry cloth. Do not use aggressive chemical cleaners, because they can damage the sticker. A change in the color of the exhaust system is normal due to the high temperatures.
2. The wearing out of the muffler silencing material depends on the type of the motor and riding style. Contact your dealer/serviceman if visible changes appear on muffler's outer sleeve or the noise level is increased.
3. Periodically make sure all the bolts and springs are sufficiently tight.

SUZUKI RM-Z 450 Racing line, model year: 2006-2007

Product code: S-S4MR5-QT

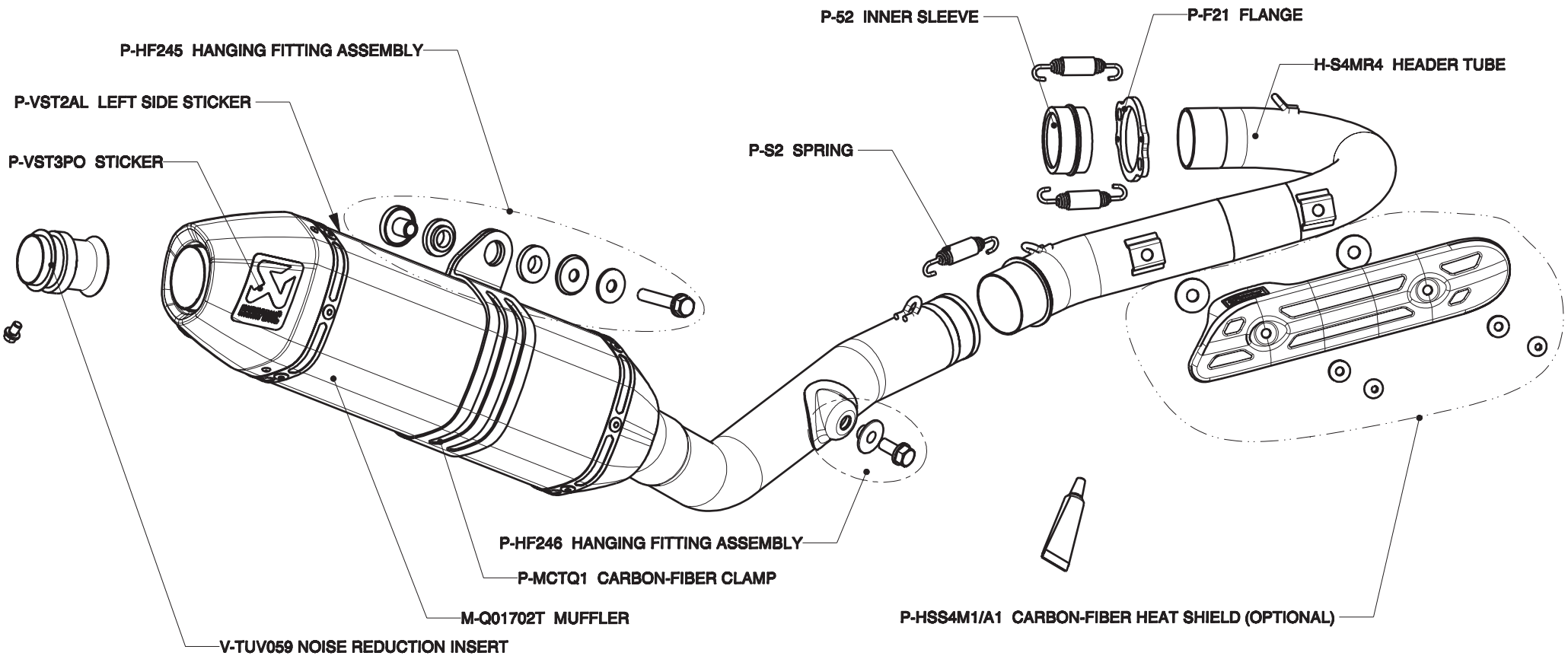

SUZUKI RM-Z 450 Racing line with spark arrester, model year: 2006-2007

Product code: S-S4MR5-QTA

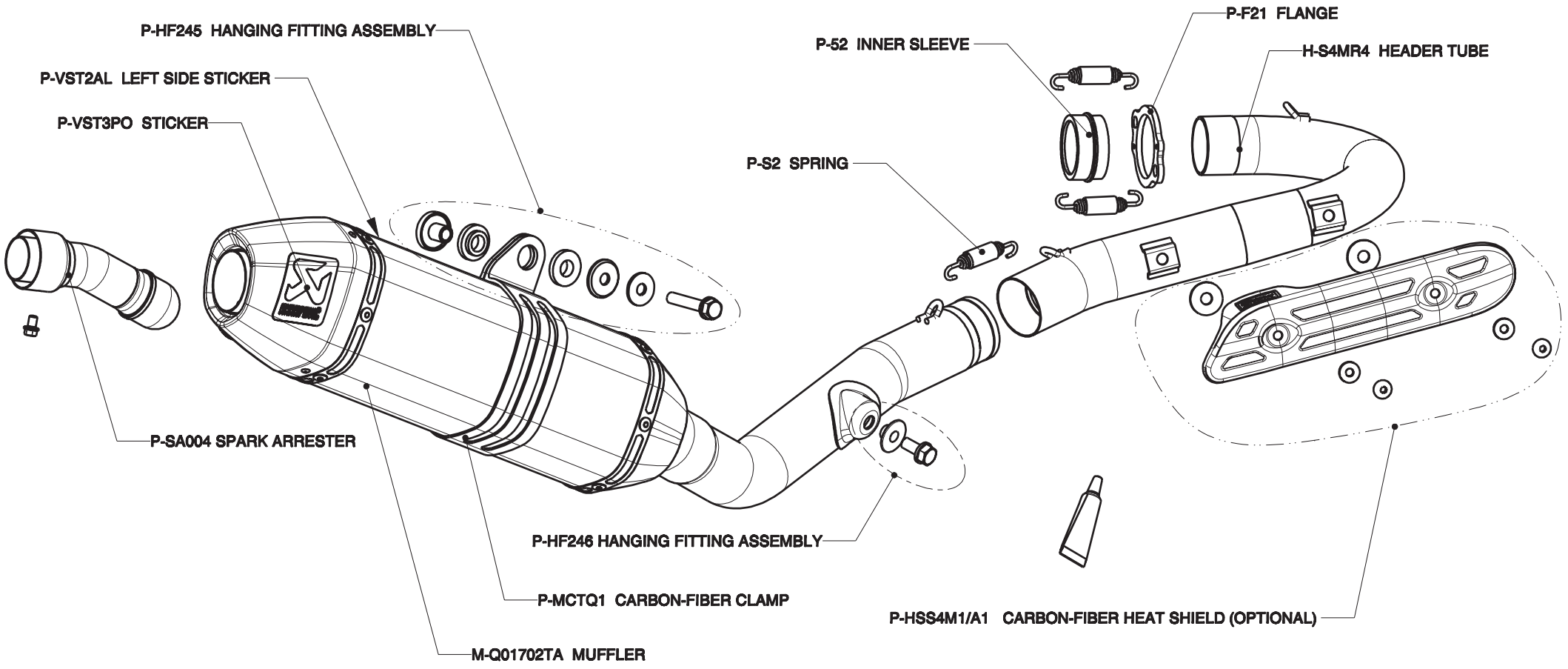

SUZUKI RM-Z 450 Evolution complete exhaust system, model year: 2006-2007

Product code: S-S4MET5-QT

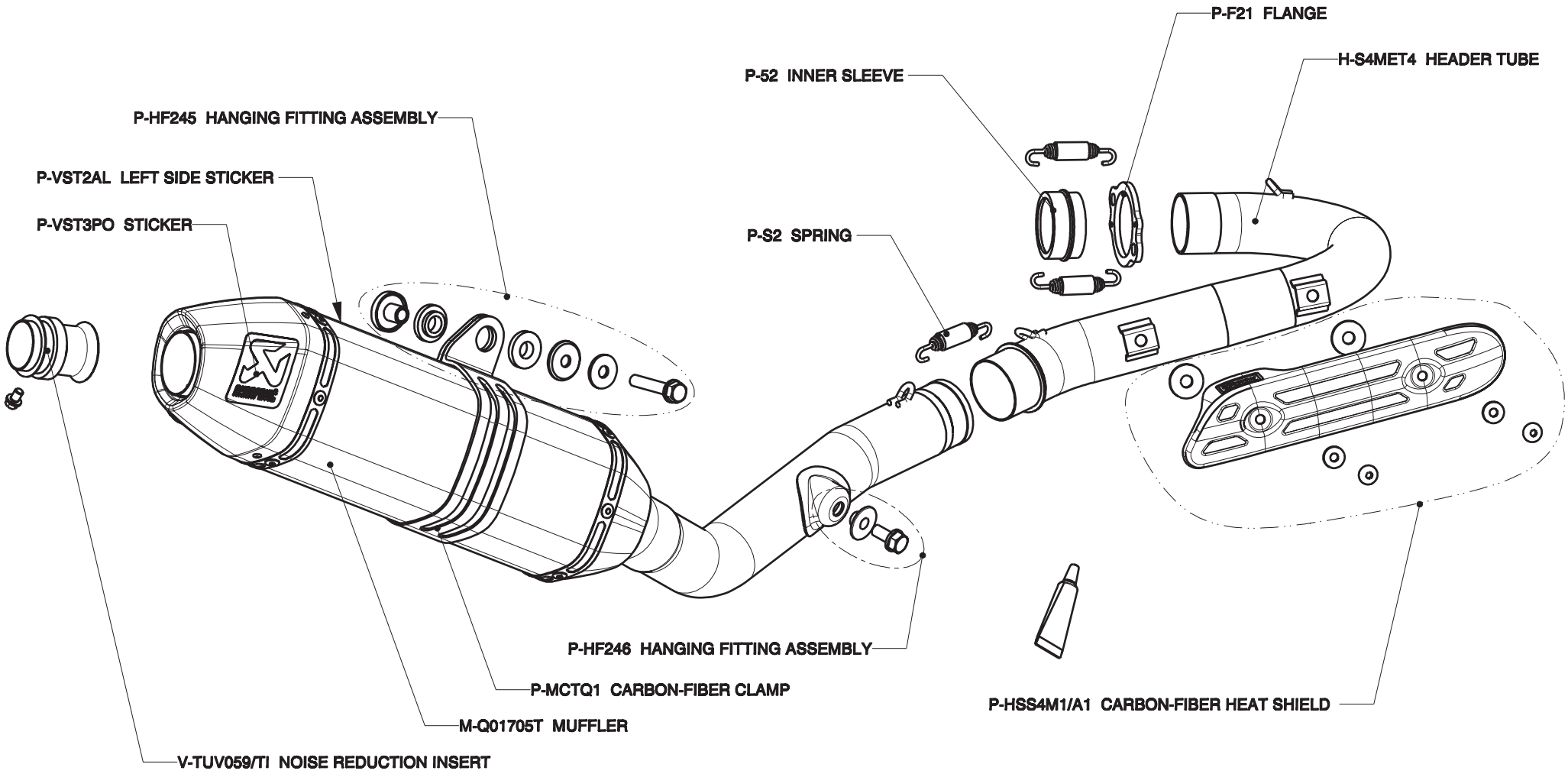

SUZUKI RM-Z 450 Evolution complete exhaust system with spark arrester, model year: 2006-2007

Product code: S-S4MET5-QTA

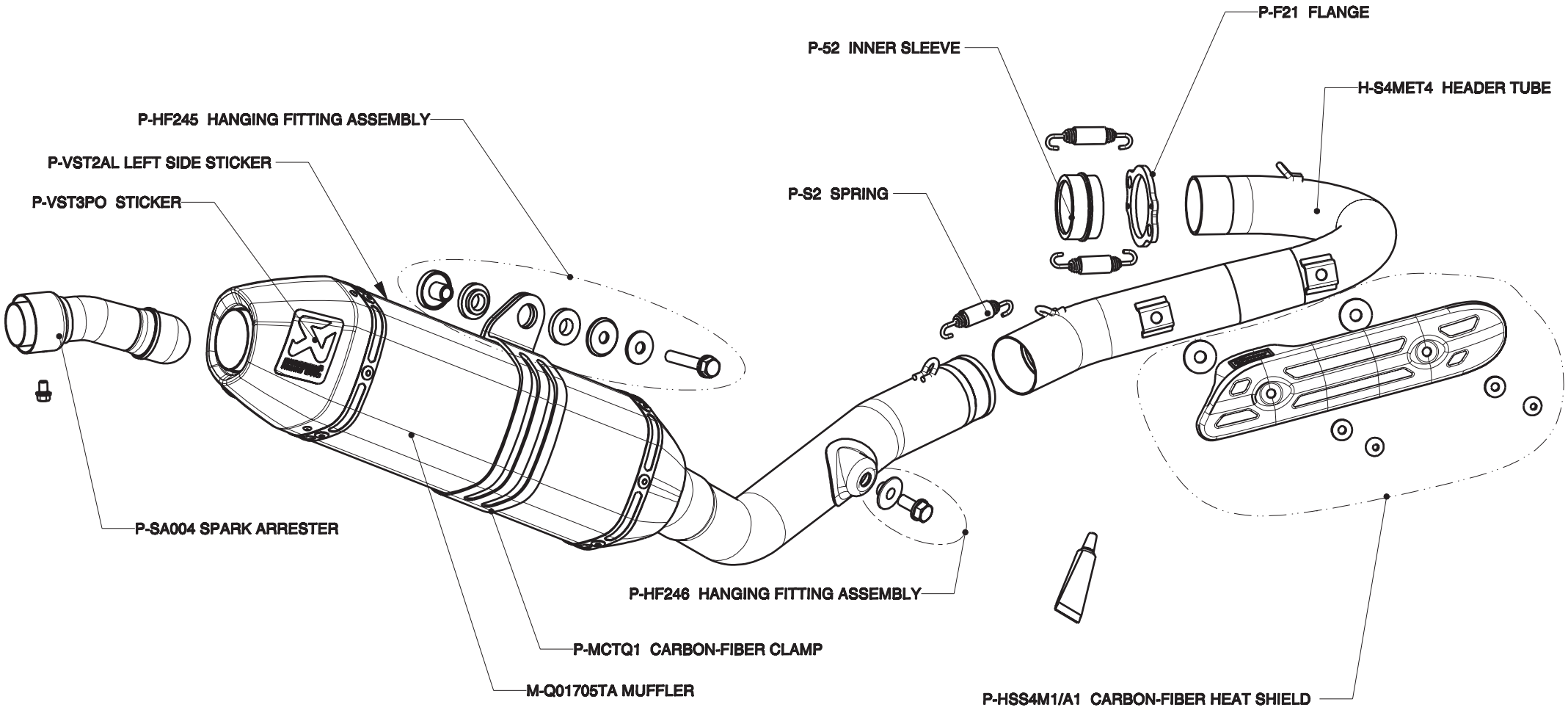

WARNING:

Please note that certain aftermarket exhaust systems may not comply with applicable California laws and regulations, and may therefore be prohibited for use on California highways or roads, or on roads or vehicles otherwise subject to emissions control requirements.

Akrapovič exhaust systems for automobiles and motorcycles mounted downstream of the catalytic converter (also known as “cat-back systems”) are considered “replacement parts” in California by the California Air Resources Board (CARB), and do not require an exemption or executive order from CARB to be sold in California. However, California prohibits the use of any aftermarket exhaust system that modifies, removes or replaces original equipment catalysts, unless CARB has issued an Executive Order as to such part or system.

Further, Akrapovič parts or exhaust systems used or intended for use on “racing vehicles” (i.e. a competition vehicle used exclusively for competition on closed-course circuits) do not require an exemption or Executive Order from CARB to be sold in California. However, such parts are prohibited from use on California public highways or roads, even if occasionally used “off-road.”