Installation instructions

Akrapovič Exhaust Systems
Slip-On and Slip-On Megaphone
for the
Kawasaki Z1000 / Z1000SX

502552

www.akrapovic.com

Congratulations on purchasing an Akrapovič exhaust system. Please read the entire installation manual prior to undertaking any activities related to installation of your new Akrapovič exhaust system. In case you do not fully understand the manual or any of its parts, please contact your authorized dealer!

This product should be installed by someone with sufficient knowledge of exhaust systems and their installation, and appropriate hand or power tools. If you are not qualified for this work, please utilize a certified mechanic for installation. By installing Your Akrapovič exhaust system, you indicate that you have read the installation manual in its entirety and you agree with the terms stated herein.

It is your responsibility to follow all installation instruction guidelines supplied with the Akrapovič exhaust system and undertake all necessary safety precautions. Akrapovič d.d. assumes no responsibility for damages occurring from misuse, abuse, improper installation, improper operation, lack of responsible care, or all previously stated reasons resulting from incompatibility with other manufacturer's products and/or systems.

IMPORTANT INFORMATION

Exclusion of Certain Liability

1. The manufacturer, importer or dealer shall not be liable for any incidental damage including personal injury or any other damages caused by improper installation or operation of the Akrapovič exhaust system. When installing the Akrapovič exhaust system be careful that the exhaust system does not touch other parts sensitive to high temperature.
2. Akrapovič makes no representation or warranties with regard to damage caused by the improper installation, use and maintenance of the Akrapovič exhaust system. The warranty is limited to defects recognized by our technical department and due to normal use, and excludes items subject to normal wear (gaskets and damping wool). The guarantee is void in case of accident, modification, improper or competition use.
3. Do not attempt to install the Akrapovič exhaust system on a vehicle model for which it was not made or tested by Akrapovič.
4. When the exhaust system gets very hot during operation, be careful not to burn yourself on the exhaust system or parts which are in direct contact with it, even when the engine is not running. Also protect other people, especially children, from the injuries mentioned above.
5. In some cases Akrapovič exhaust system kits contain chemical products (ceramic anti-seizing grease; bolt sealant). Handle with care, do not inhale or swallow. Avoid excessive contact with skin, eyes or mucous membranes. Keep out of reach of children.
6. Technical specifications of Akrapovič exhaust systems and related products are subject to change without notice.
7. Before removing the original exhaust system from your vehicle, please compare the parts you received with the list of materials provided in the installation manual in order to assure that you have all the parts necessary for the installation of your new Akrapovič exhaust system.
8. Although this manual consists of instructions for installation in written form, as well as photographs and pictures representing individual steps of the installation, please note that the photographs and pictures are symbolic and are intended for representation of general overview only. The photographs and pictures contained herein should serve as a guideline only and actual installation of the exhaust system may not correspond with the photographs and pictures entirely.
9. The process of uninstalling the original exhaust system may vary depending on the existing exhaust system. Please follow the original exhaust system manufacturer's instructions for uninstalling the original exhaust system.

Trademarks

The Akrapovič Exhaust System Technology logo is a registered trademark of Akrapovič d.d.

Akrapovič website

Information about Akrapovič exhaust systems and related products is available on the Akrapovič website at: **http://www.akrapovic.com/**

Copyright

No part of the Akrapovič exhaust system or its documentation may be reproduced or distributed in any form or by any means without the prior written authorization of the Akrapovič company.

© Akrapovič, d.d. All rights reserved.

Symbols

The following symbols are used throughout these installation instructions:



TOOLS REQUIRED



TIGHTENING TORQUE



INSTALLATION TIP



CAUTION OR WARNING



USE BOLT SEALANT; Apply 3 to 4 small drops of bolt sealant onto the cleaned and degreased threads before tightening the bolts. **WARNING! Avoid contact with skin, eyes and mucous membranes. Do not inhale fumes. Keep out of reach of children.**



USE ANTI-SEIZE LEAD-FREE COPPER PASTE (black tube); Provides trouble-free and long-lasting protection against seizing, corrosion and rusting of bolts, threaded ends, nuts, joints, etc. Also protects against vibration, wear and impact. **WARNING! Avoid eye contact. Avoid excessive skin contact. Keep out of reach of children.**



USE ANTI-SEIZING GREASE (white tube); Prevents seizing, corrosion and excessive wear between the titanium components of your exhaust system. **WARNING! Avoid eye contact. Avoid excessive skin contact. Keep out of reach of children.**



T-handle 10 mm wrench
T-handle 3 mm three hexagon key wrench
T-handle 4 mm three hexagon key wrench
T-handle 6 mm three hexagon key wrench
Spring puller
Screwdriver

BEFORE INSTALLING, CHECK SCHEMATIC OF THE EXHAUST SYSTEM!

IF ANY ITEMS IN THE AKRAPOVIČ EXHAUST SYSTEM PACKAGE ARE MISSING, PLEASE CONTACT YOUR AUTHORIZED DEALER. KEEP THE SCHEMATIC FOR FUTURE REFERENCE.

THESE INSTALLATION INSTRUCTIONS MUST BE READ CAREFULLY IN ORDER TO ENSURE PROPER INSTALLATION AND OPERATION OF THE AKRAPOVIČ EXHAUST SYSTEM.

THE EXHAUST SYSTEM CAN BE EXTREMELY HOT. ALLOW THE EXHAUST AND ENGINE TO COOL DOWN BEFORE BEGINNING INSTALLATION.

WE ADVISE YOU TO LEAVE INSTALLATION TO A QUALIFIED SERVICEMAN. IMPROPER INSTALLATION MAY RESULT IN A SHORTER LIFETIME OF THE EXHAUST SYSTEM AND/OR DAMAGE TO THE VEHICLE.

REMOVAL OF STOCK EXHAUST SYSTEM:

1. Put the motorcycle on a side stand, we recommend a racing stand. Make sure, that surface is solid and flat.
2. Unscrew the marked bolt and remove the right side muffler heatshield **(Figure 1).**

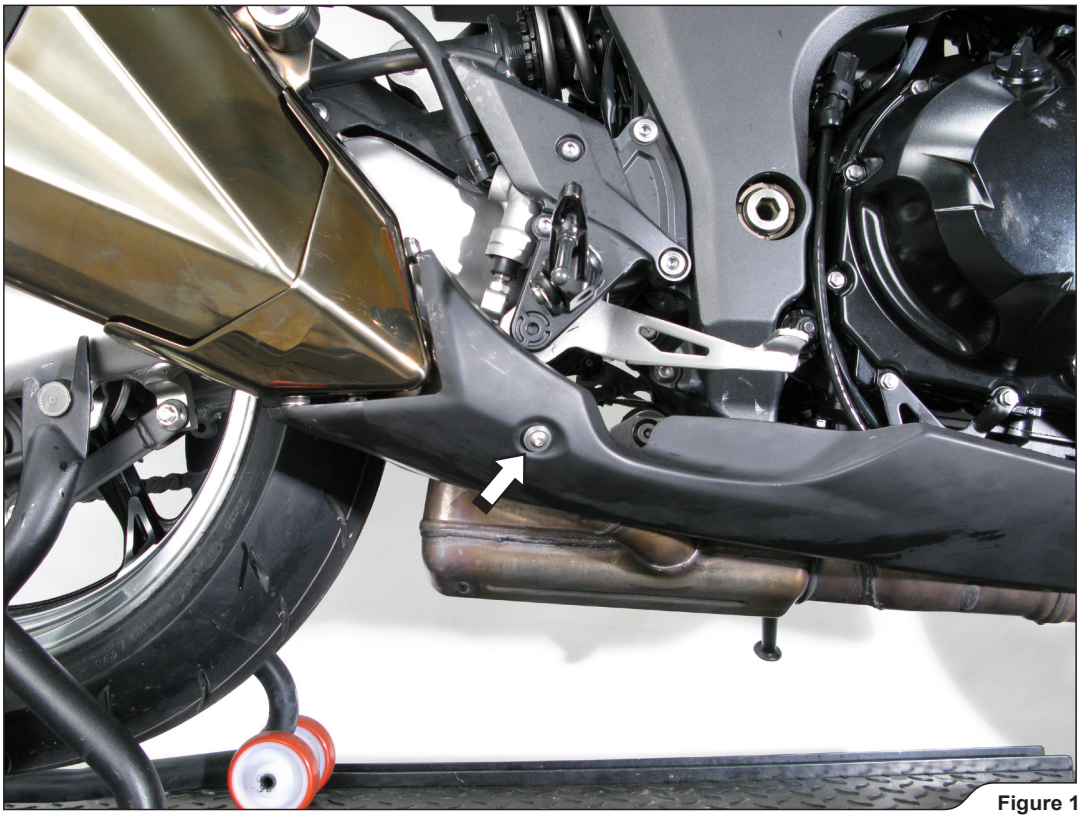

Figure 1

3. Remove the passenger seat. Unscrew and remove the riders' seat **(Figure 2).**



Figure 2

4. Undo the safety pin and remove the exhaust valve cables off the servo motor **(Figure 3, 4).**

! **WARNING: do not turn the the servo motor wheel with force or the servo motor could be damaged. Hold the servo wheel in place, while removing the cables!**

INSTALLATION TIP: for easier removal, loosen up the exhaust valve cable adjusters.

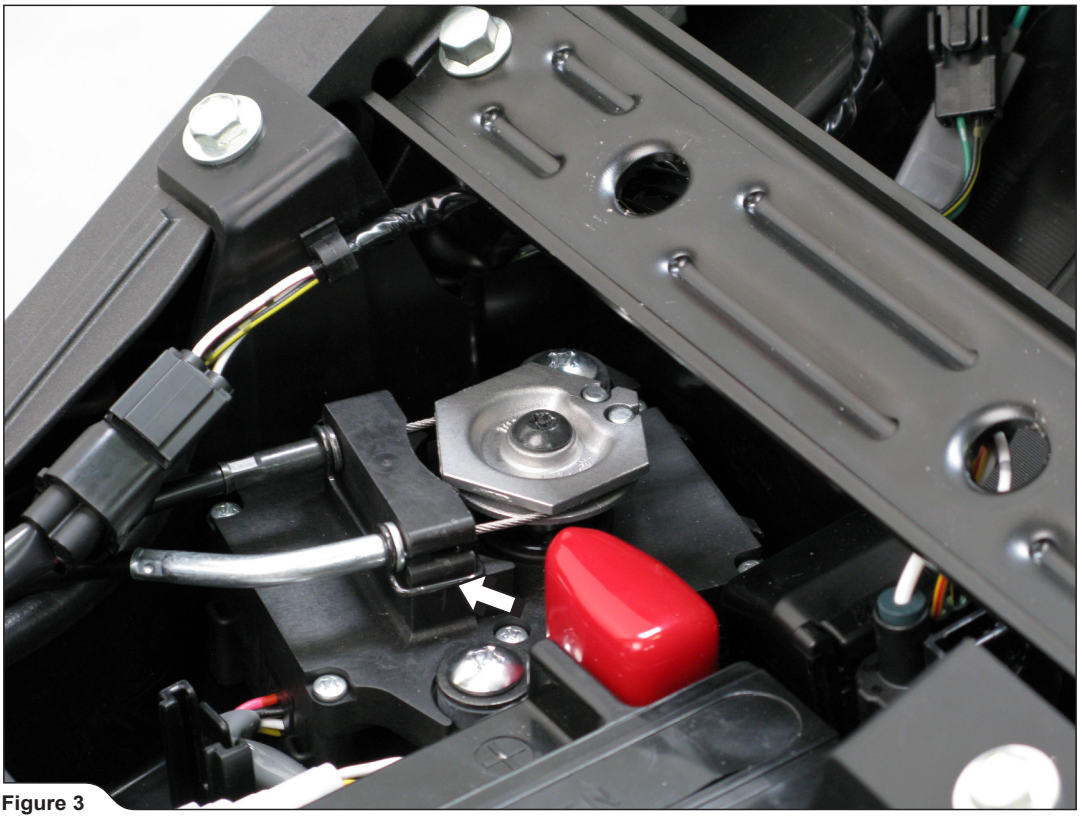

Figure 3

! **WARNING: do not disconnect the servo's elecrical connector or remove the servo motor off the vehicle!**

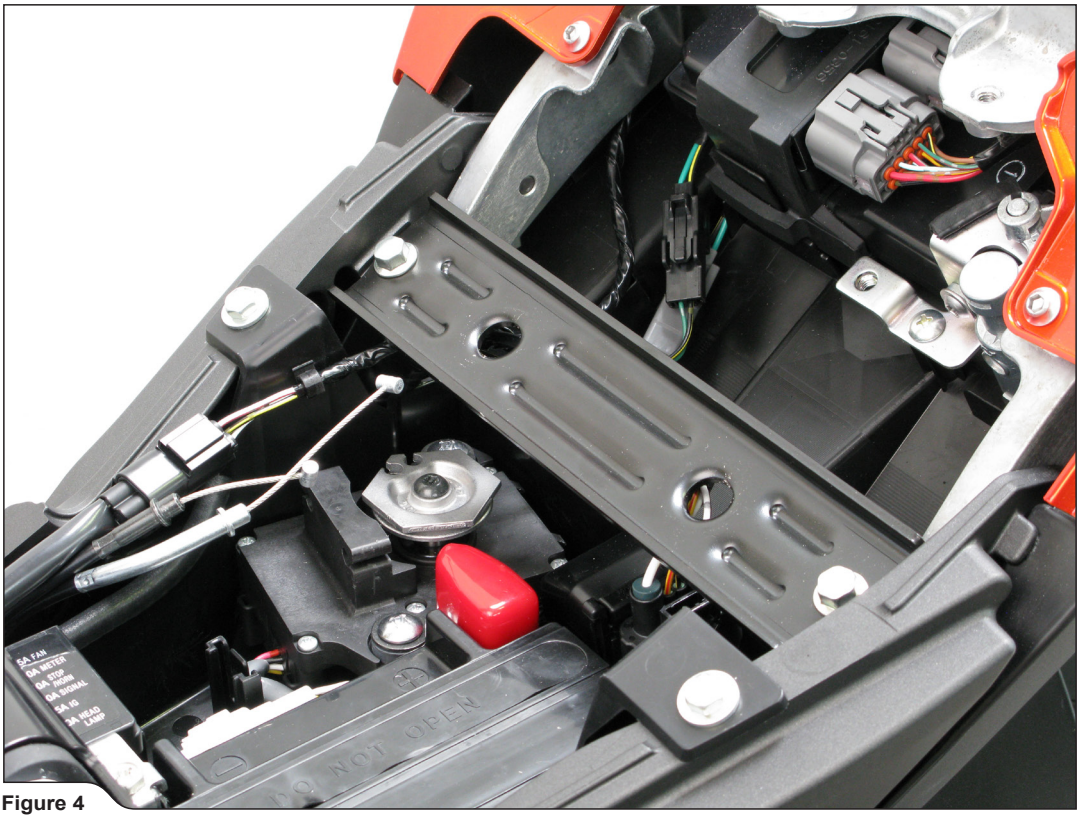

Figure 4

5. Untighten the marked metal clamp bolt and unscrew the muffler bracket bolt on both sides. Remove the mufflers off the motorcycle **(Figure 5, 6).**

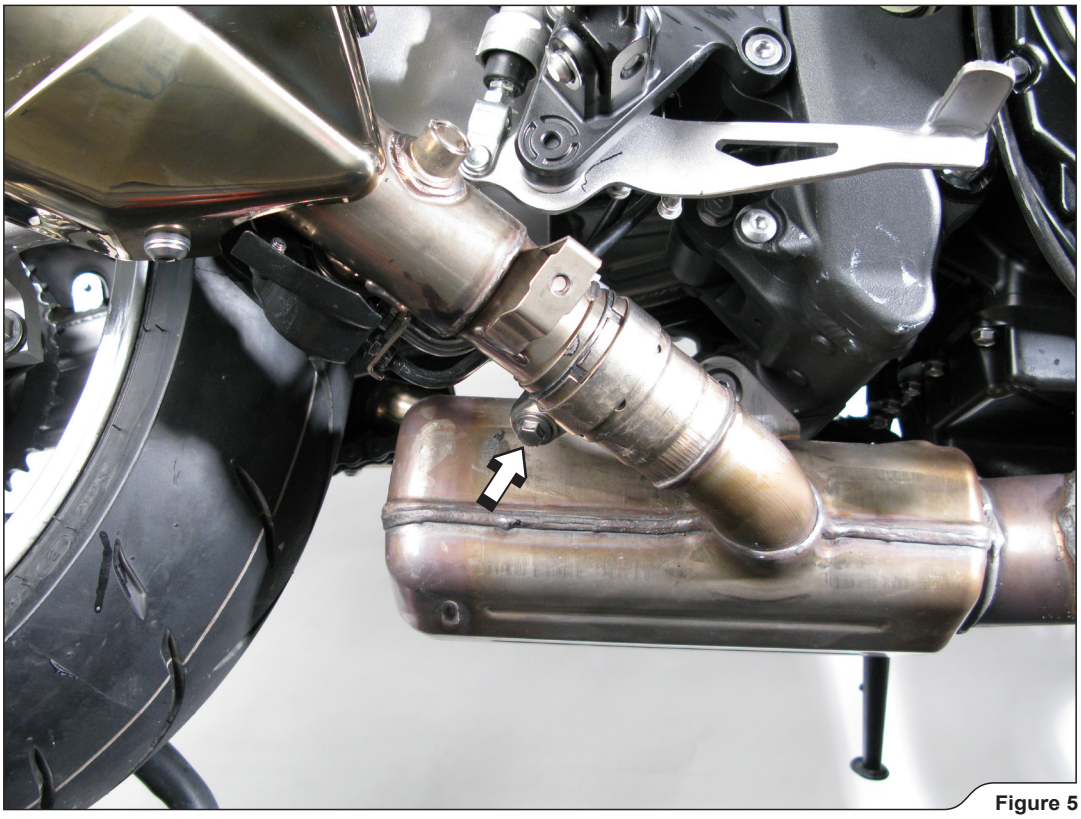

Figure 5

! **WARNING: while removeing the right side muffler together with exhaust valve cables, make sure you don't damage any part of the motorcycle!**



Figure 6

INSTALLATION OF THE AKRAPOVIČ SLIP-ON and SLIP-ON MEGAPHONE EXHAUST SYSTEMS:

1. Hand tighten the metal clamps with spring hooks onto the outlets of stock collector, as shown **(Figure 7, 8).**

! WARNING: there are LEFT and RIGHT clamps! (Figure 7)

! WARNING: use anti-seize copper paste on bolt threads of the metal clamps!



Figure 7

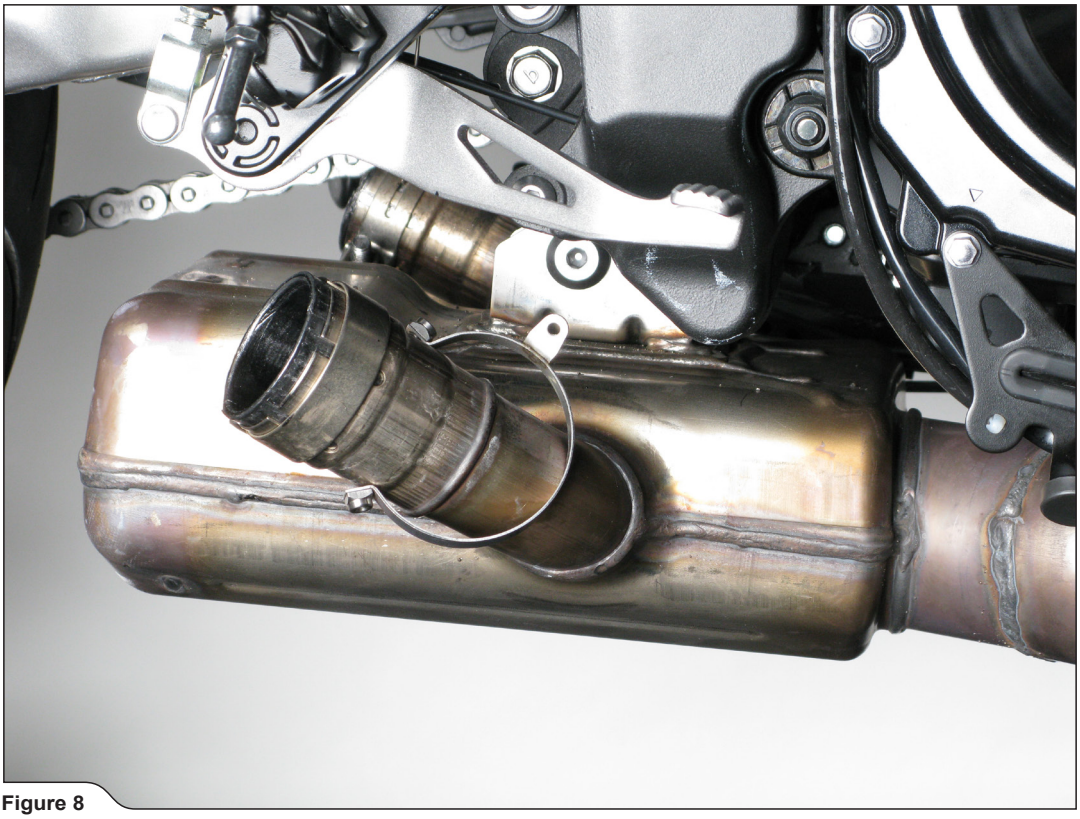

Figure 8

2. **For Slip-On only:** correctly position the carbon-fiber clamps and slide them onto the mufflers **(Figure 9).**

! **WARNING: open the clamps slightly wider than the diameter of the outer sleeve of the mufflers – do not scrape them along the muffler outer sleeves!**



Figure 9

3. **For Slip-On only:** slide the muffler pipes all the way into the stock collector outlets, align the mufflers in respect to the motorcycle and tighten the muffler clamps to the bracket, using stock bolts, washers and nuts **(Figure 10).**

INSTALLATION TIP: if damaged, you can replace stock graphite gaskets at muffler pipes - stock collector joints with additional Akrapovič graphite gaskets.

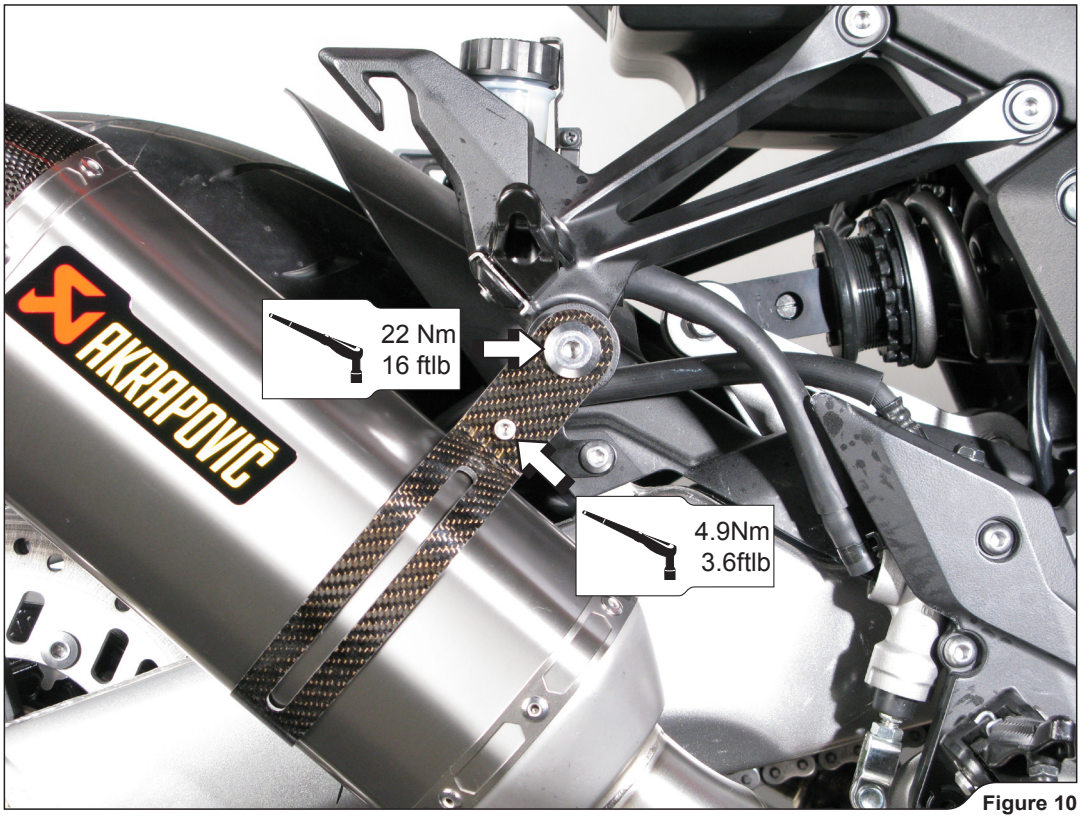

Figure 10

4. **For Slip-On Megaphone only:** slide the Megaphones all the way into the stock collector outlets, align the Megaphones in respect to the motorcycle and tighten the brackets, using stock bolts, washers and nuts **(Figure 11).**

INSTALLATION TIP: if damaged, you can replace stock graphite gaskets at Megaphones - stock collector joints with additional Akrapovič graphite gaskets.

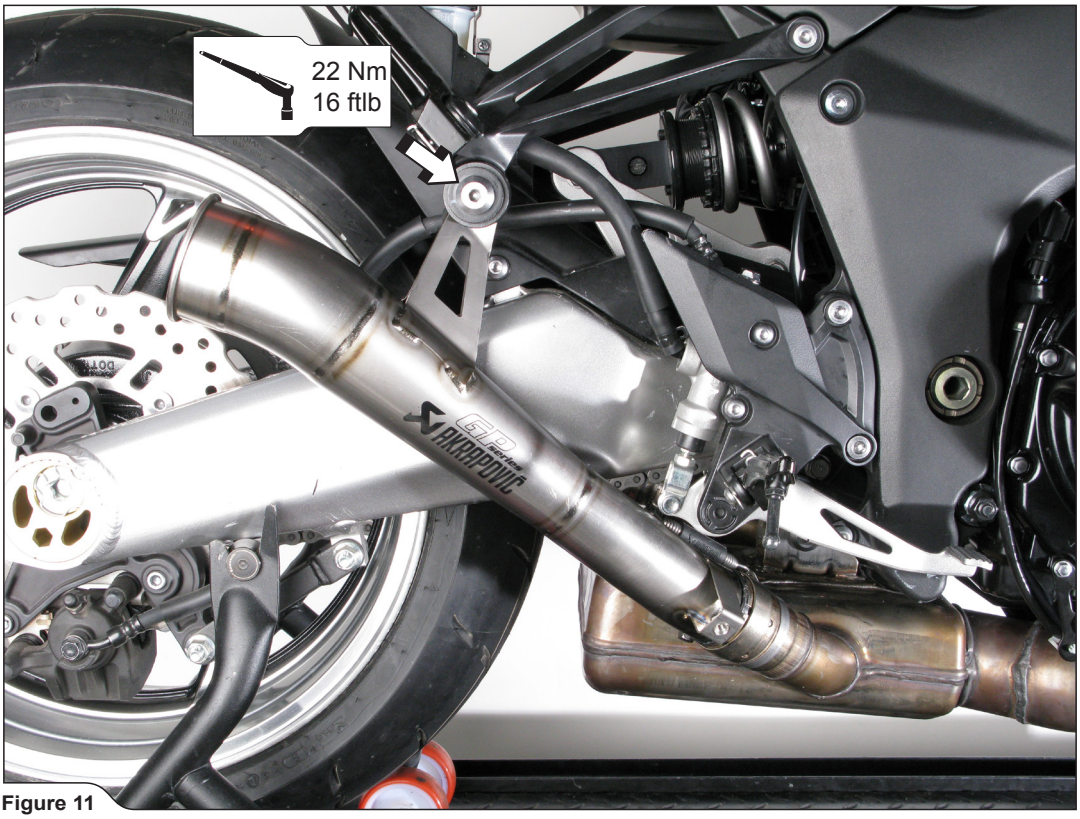

Figure 11

5. Attach the springs and tighten the clamps to a specified torques on both sides of the motorcycle **(Figure 12).**

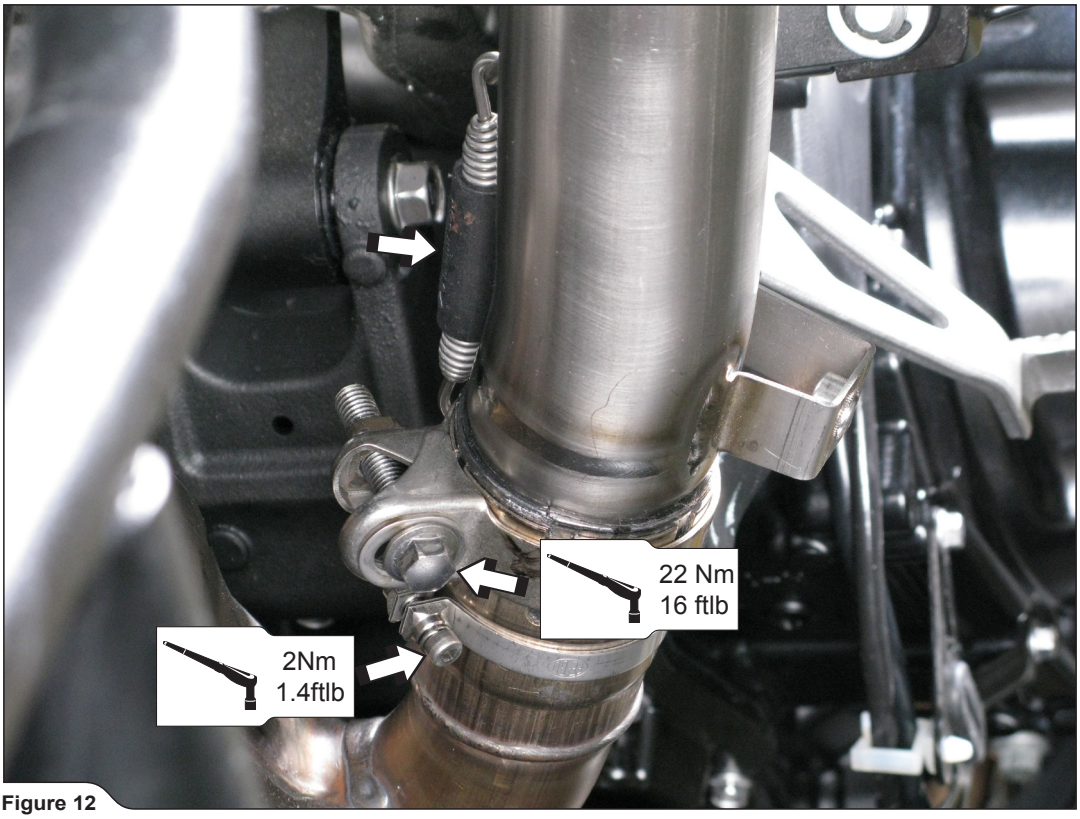

Figure 12

6. Install the stock heatshield back on the right side of the motorcycle, using stock bolt and washer **(Figure 13).**

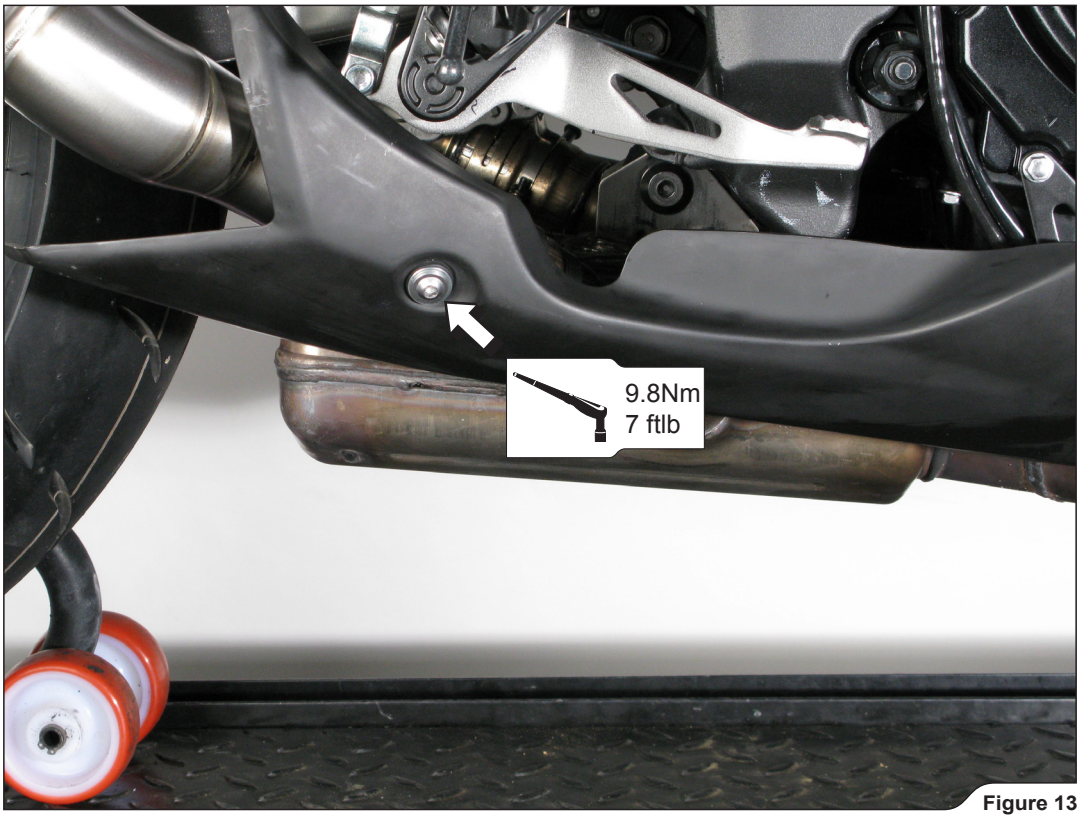

Figure 13

7. Reinstall both seats in the reverse order from the order in which they were removed **(Figure 14).**



Figure 14

Final installation:

Clean grease spots:

a. Mufflers – carbon-fiber outer sleeve: use a soft dry cloth.
b. Mufflers – titanium outer sleeve: use a soft cloth sprayed with a multi-purpose spray lubricant (WD-40 or equivalent).
c. Mufflers – carbon-fiber outlet cap: use a soft dry cloth.
d. Muffler pipes - stainless steel link pipes: use a soft cloth sprayed with a contact cleaner, then wipe with a soft dry cloth
e. Megaphones - titanium: use a soft cloth sprayed with a multi - purpose spray lubricant (WD-40 or equivalent).

Cleaning will prevent spots from burning onto the surface. Do not use aggressive chemical cleaners, because they can damage the sticker.

! **WARNING: make sure all the bolts are sufficiently tightened. In case the exhaust system touches the cowling or other parts repeat the adjustment of the exhaust system or contact your authorized dealer.**

! **WARNING: check vehicle manufacturer manual for tightening torques (for dismounted stock parts)!**

! **IT IS NORMAL IF WHITE SMOKE COMES OUT OF THE MUFFLER ON FIRST OPERATION.**

! **DO NOT STAND BEHIND THE MUFFLER ON FIRST OPERATION.**

! **DO NOT USE AUTOMOTIVE WHEEL CLEANERS OR ANY CLEANING PRODUCTS WHICH CONTAIN ACIDIC ADDITIVES TO CLEAN AKRAPOVIČ EXHAUST SYSTEMS.**

MAINTENANCE OF THE AKRAPOVIČ EXHAUST SYSTEM

1. Clean the titanium exhaust components with a multi-purpose spray lubricant (WD-40 or equivalent), carbon fiber exhaust components with soft and dry cloth and stainless steel components with soft cloth sprayed with contact cleaner, then wipe with soft and dry cloth. A change in the color of the exhaust system is normal due to the high temperatures.
2. Periodically make sure all the bolts and springs are sufficiently tight.

Kawasaki Z1000 / SLIP ON exhaust system, fits on Z1000SX with side cases/ STREET LEGAL
Kawasaki Z1000 SX

Product code: S-K10SO6-HZC
S-K10SO6-HZT

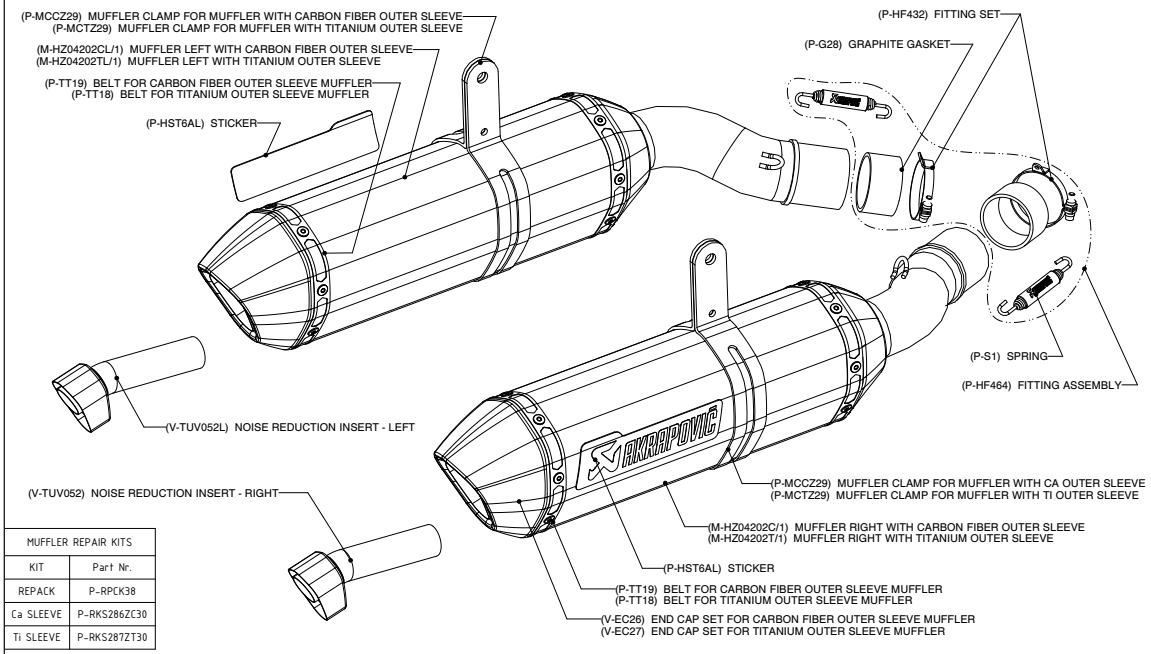

MUFFLER REPAIR KITS	
KIT	Part Nr.
REPACK	P-RPCK38
Ca SLEEVE	P-RKS286ZC30
Ti SLEEVE	P-RKS287ZT30

WARNING! SYSTEM DOES NOT FIT ON Z1000SX WITH SIDE CASES!

KAWASAKI Z1000 / SLIP-ON exhaust system/ MEGAPHONE / OPEN
KAWASAKI Z1000 SX

Product code: SM-K10SO1T

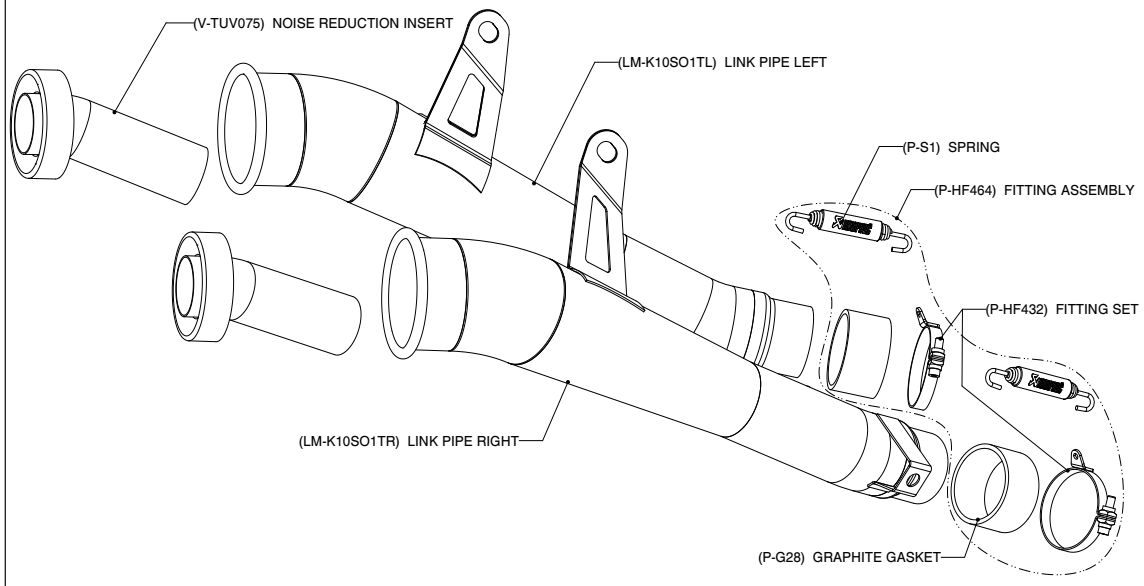

WARNING! IN CASE OF COMBINATION WITH RACING LINE TUBE SET, THE SLIP-ON HOMOLOGATION IS NOT VALID!

KAWASAKI Z 1000 / RACING LINE with Slip-on street legal mufflers, fits on Z1000SX with side cases / OPEN
KAWASAKI Z 1000SX

Product code: S-K10R6-ZC/3
S-K10R6-ZT/3

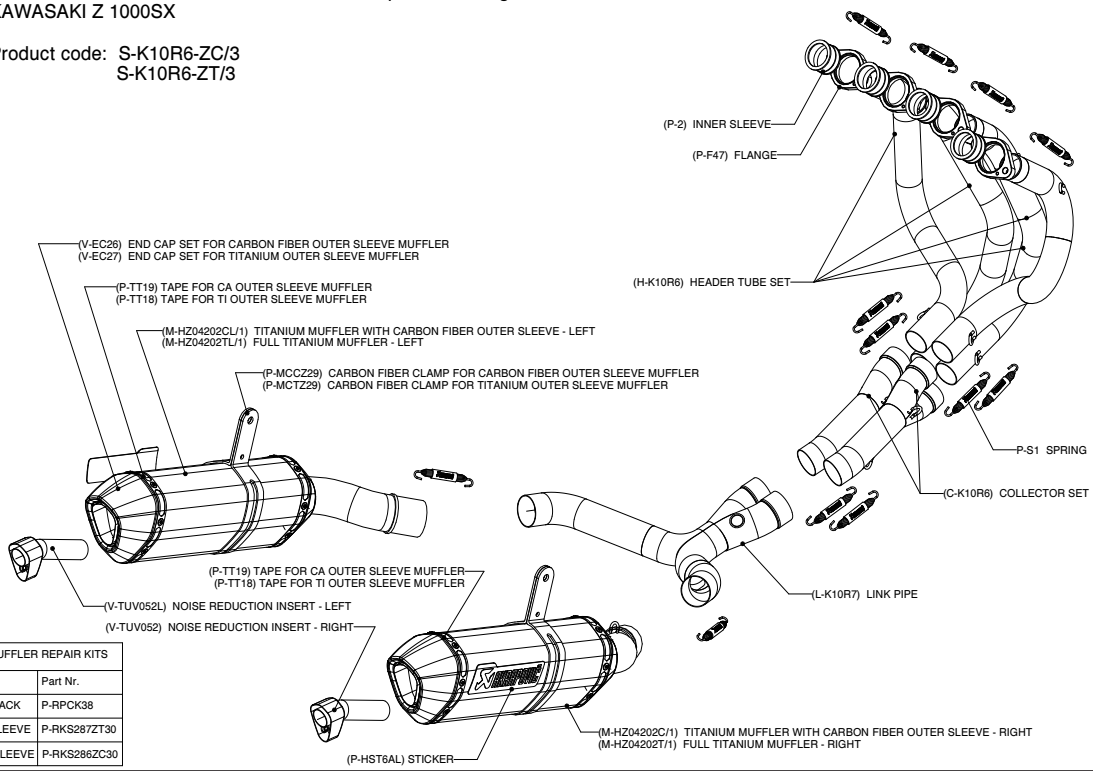

MUFFLER REPAIR KITS	
KIT	Part Nr.
REPACK	P-RPCK38
Ti SLEEVE	P-RKS287ZT30
Ca SLEEVE	P-RKS286ZC30

WARNING:

Please note that certain aftermarket exhaust systems may not comply with applicable California laws and regulations, and may therefore be prohibited for use on California highways or roads, or on roads or vehicles otherwise subject to emissions control requirements.
Akrapovič exhaust systems for automobiles and motorcycles mounted downstream of the catalytic converter (also known as “cat-back systems”) are considered “replacement parts” in California by the California Air Resources Board (CARB), and do not require an exemption or executive order from CARB to be sold in California. However, California prohibits the use of any aftermarket exhaust system that modifies, removes or replaces original equipment catalysts, unless CARB has issued an Executive Order as to such part or system.
Further, Akrapovič parts or exhaust systems used or intended for use on “racing vehicles” (i.e. a competition vehicle used exclusively for competition on closed-course circuits) do not require an exemption or Executive Order from CARB to be sold in California. However, such parts are prohibited from use on California public highways or roads, even if occasionally used “off-road.”