Installation instructions

Akrapovič Exhaust System

Slip-On

for the

HONDA CB1000 Hornet

510459

Document nr.:
D250.1.00.1586 A

www.akrapovic.com

D250.1.00.0000 G

Congratulations on purchasing the Akrapovič product. The Akrapovič product is made by Akrapovič d.d., Malo Hudo 8a, 1295 Ivančna Gorica, Slovenia ("Akrapovič").

Please read this entire installation manual carefully prior to installing and using the Akrapovič product.

Akrapovič product should only be installed by persons skilled in motorcycle exhaust system or other motorcycle parts installation and performance. The instructions provided in this manual should be followed to ensure proper installation and safe use of the Akrapovič product. Akrapovič and/or its partners shall not be held liable for any damage or personal injury (including direct, indirect, or consequential damage) sustained as a result of improper installation of the Akrapovič product or its use and maintenance contrary to the instructions and warnings contained herein.

If you have any questions regarding the installation and/or proper use of the Akrapovič product or this manual, please contact your local Akrapovič partner.

For more information on the Akrapovič product, see the official Akrapovič website at:
http://www.akrapovic.com

GENERAL INFORMATION

Your safety is our number one priority. Please ride your motorcycle responsibly, safely and always obey local traffic rules.

All statements made with regard to the product's compliance are made in respect of the product "as is". Any modifications of the Akrapovič product or its improper installation, use or maintenance that is not in accordance with this Installation manual, may result in severe damage to the product and/or motorcycle, as well as personal injury, and may affect the product's compliance with the legal requirements, such as product's air and/or noise emissions (as an example, the motorcycle may not be suitable for use on public roads any longer), as well as warranty coverage.

The product may only be used in accordance with relevant laws and regulations, including state and federal, where applicable.

Damage caused by improper installation, use and maintenance of the Akrapovič product is not covered by the Akrapovič warranty. Please refer to the enclosed warranty with regard to the terms of our warranty.

Technical specifications of Akrapovič products are subject to change without notice.

COPYRIGHT AND OTHER RIGHTS NOTICE

The Akrapovič trademark, including corporate logos and emblems, are subject to copyright as well as trademark rights of Akrapovič, its licensors, or third persons authorizing Akrapovič to use them.

Any reproduction, technical or other manipulation, translation, or other use of the copyright and/or trademark rights contained herein is prohibited without the explicit prior written consent of Akrapovič. The same especially applies to the entire contents of this manual and/or any of its parts, including but not limited to technical specifications, instructions, graphs, photographs, and so on included in this manual.

The shape of the Akrapovič product is protected under a registered Community Design No. RCD 008323539-0001.

Akrapovič takes all copyright and other rights infringement cases under serious consideration. If you have any reason to believe that your product is not an original Akrapovič product, please contact our local partners or Akrapovič at info@akrapovic.com.

SAFETY AND COMPLIANCE WARNING, PLEASE READ CAREFULLY

BEFORE REMOVING THE STOCK PARTS AND BEGINNING THE INSTALLATION OF YOUR NEW AKRAPOVIČ PRODUCT, PLEASE MAKE SURE THAT ALL ITEMS LISTED BELOW ARE VERIFIED:

- THIS MANUAL IS SPECIFIC TO THE MOTORCYCLE INDICATED ON THE COVER PAGE, FOR WHICH IT IS DESIGNED. INSTALLATION PROCEDURES VARY DEPENDING ON THE TYPE OF MOTORCYCLE. PLEASE VERIFY THAT THE AKRAPOVIČ **PRODUCT AND THIS INSTALLATION MANUAL CORRESPOND TO THE TYPE OF YOUR MOTORCYCLE.**
- **FOR EXHAUST SYSTEM ONLY:** THE EXHAUST SYSTEM CAN GET EXTREMELY HOT DURING AND AFTER IT IS USED. MAKE SURE NOT TO TOUCH THE EXHAUST SYSTEM UNTIL IT IS COMPLETELY COOL. **ALLOW THE EXHAUST AND ENGINE TO COOL DOWN BEFORE BEGINNING INSTALLATION OR ANY OTHER WORK ON THE MOTORCYCLE.**
- MAKE SURE THE MOTORCYCLE IS **SECURELY POSITIONED TO PREVENT TIPPING OVER** AND DAMAGE TO YOURSELF AND OTHERS, OR THE MOTORCYCLE.
- PLEASE CHECK THE PARTS YOU RECEIVED AGAINST THE PARTS LIST AVAILABLE ON OUR WEBSITE (PLEASE USE THE QR CODE ON THE FRONT PAGE OR LOOK FOR “SCHEMATIC VIEW” IN THE RESPECTIVE PRODUCT PAGE ON WWW.AKRAPOVIC.COM). MAKE SURE THAT YOU HAVE **ALL THE PARTS NECESSARY FOR THE INSTALLATION** OF YOUR NEW AKRAPOVIČ PRODUCT. IF ANY OF THE PARTS IS MISSING, PLEASE DO NOT PROCEED WITH UNINSTALLING YOUR STOCK PARTS/ INSTALLING THE AKRAPOVIČ PRODUCT AND CONTACT THE RETAILER WHERE YOU PURCHASED THE AKRAPOVIČ PRODUCT.
- ALWAYS **CHECK YOUR MOTORCYCLE’S GROUND CLEARANCE.** FOR ADVANCED USERS, WE RECOMMEND YOU CHECK THE MOTORCYCLE SPRING PRELOAD SETTINGS TO OPTIMIZE GROUND CLEARANCE WHERE POSSIBLE.
- **FOR EXHAUST SYSTEM ONLY:** EVERY EXHAUST SYSTEM MUFFLER HAS ITS UNIQUE SERIAL NUMBER, WHICH IDENTIFIES THE AUTHENTICITY OF THE PRODUCT. YOU CAN FIND THE SERIAL NUMBER ON THE MUFFLER’S INLET PIPE. PLEASE REFER TO THE PICTURE BELOW. PLEASE VERIFY THAT YOUR EXHAUST SYSTEM IS AN ORIGINAL AKRAPOVIČ PRODUCT. IF YOU HAVE ANY DOUBTS, PLEASE CONTACT THE RESELLER WHERE YOU PURCHASED THE EXHAUST SYSTEM OR AKRAPOVIČ PARTNERS. THIS MANUAL, ANY CERTIFICATES AND AKRAPOVIČ WARRANTY APPLY TO ORIGINAL PRODUCTS ONLY.

EXAMPLES OF SERIAL NUMBER POSITION

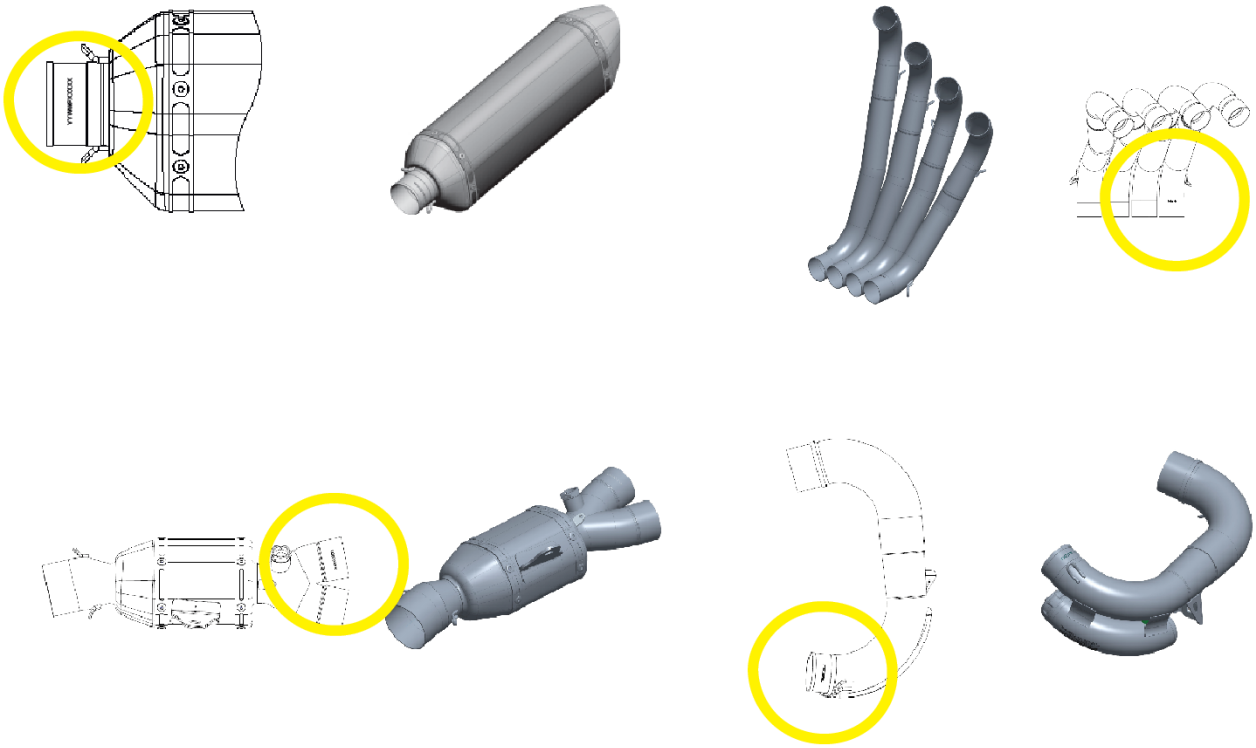

NOISE AND EMISSION WARNINGS

General warning
Because of the world-wide distribution of Akrapovič d.d. products, neither Akrapovič d.d. nor any of its subsidiaries make any representation that the products comply with the air and/or noise emissions laws, or labeling laws, of any jurisdiction. The purchasers are entirely responsible for informing themselves of the applicable laws where the products are to be used and to comply with those law.

Although legal compliance of Akrapovič products in a specific country should be determined by the user, you can find some basic guidance on compliance of your Akrapovič product with various legal requirements on the product-related part of our website (please use the QR code on the front page or look for the respective product page on www.akrapovic.com). For EC and ECE type approvals, please refer to the certificate enclosed to your product.

USA WARNING

Various U.S. states and the U.S. federal government have individual laws regulating the use of aftermarket parts and systems, especially as those parts and systems modify, remove, or replace original equipment catalysts. Please consult the appropriate laws in your area before installing any aftermarket part or system on your vehicle to ensure compliance with all applicable laws. Neither Akrapovic d.d. nor any of their subsidiaries or the sellers of the parts or systems make any representation that any of their parts or systems comply with any such laws.

CALIFORNIA WARNING

California laws prohibit the use of any aftermarket part or system that modifies, removes or replaces original equipment catalysts unless the California Air Resources Board has issued an Executive Order regarding such part or system or unless the part or system is exempted by being used only on racing vehicles on closed courses. Neither Akrapovic d.d. nor any of their subsidiaries make any representation that any of their parts or systems has received such an Executive Order or that any of their parts or systems conform with the racing vehicles exemption. The purchasers are entirely responsible for informing themselves of applicable California laws and to comply with those laws.

GENERAL NOTE

Photographs and other illustrations in this manual are symbolic and are intended to help represent individual steps for proper installation and use, as well as for a general overview. The actual component parts of the Akrapovič product may not entirely correspond to the photographs and other illustrations.

SYMBOLS

The following symbols are used throughout these installation instructions:

TOOLS AND PROTECTIVE EQUIPMENT REQUIRED

TIGHTENING TORQUE

LUBRICATION

HAND TIGHTEN

INSTALLATION TIP

CAUTION OR IMPORTANT

USE BOLT SEALANT
Apply 3 to 4 small drops of bolt sealant onto the cleaned and degreased threads before tightening the bolts.

WARNING! Avoid contact with skin, eyes and mucous membranes. Do not inhale fumes. Keep out of reach of children.

USE ANTI-SEIZE LEAD-FREE COPPER PASTE (black tube)
Provides trouble-free and long-lasting protection against seizing, corrosion and rusting of bolts, threaded ends, nuts, joints, etc. Also protects against vibration, wear and impact.

WARNING! Avoid eye contact. Keep out of reach of children.

USE ANTI-SEIZING GREASE (white tube)
Prevents seizing, corrosion and excessive wear between the titanium components.

WARNING! Avoid eye contact. Keep out of reach of children.

Tools & equipment

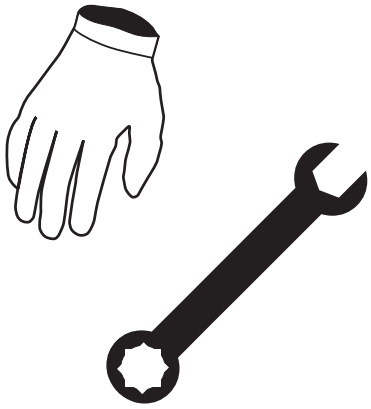

- **Mechanic gloves**
- **Combination 12 mm wrench**
- **Combination 13 mm wrench**
- **Torx 40 wrench**
- **Torx 45 wrench**

PARTS LIST

The packaging box should contain one or more of the following items:

- Akrapovič product
- Homologation certificate/ compliance documents if applicable
- Warranty
- Fitting material
- Installation Manual

Detailed list of parts can be found on the Akrapovič website (please use the QR code on the front page or look for “Schematic view” in the respective product page on www.akrapovic.com).

REMOVAL OF STOCK EXHAUST SYSTEM OR OTHER STOCK MOTORCYCLE PARTS:

The process of uninstalling the original exhaust system or other motorcycle parts, may vary depending on the existing exhaust system or other motorcycle parts. Please follow the motorcycle manufacturer’s workshop manual for uninstalling the original exhaust system or other motorcycle parts.

If you for any reason decide otherwise, please note that any information provided in this respect herein should be considered as general information provided for your convenience only. Akrapovič shall not assume any liability or responsibility with regard to uninstalling your existing exhaust system or other parts of the motorcycle, warranty coverage of such exhaust system or other motorcycle parts vehicle or their further fitness for use.

In case your Akrapovič exhaust system or other motorcycle parts may not be used on certain roads or under certain conditions, please keep the stock (or other) exhaust system or other stock parts that you can use in such circumstances legally.

REMOVAL OF STOCK EXHAUST SYSTEM:

1. Put the motorcycle on a central racing stand. Make sure, that surface is solid and flat.
2. Loosen marked clamp, unscrew marked bolt and remove the muffler off the motorcycle **(F 01)**.

! CAUTION: be careful not to injure yourself or damage any part of the motorcycle during this procedure!

F 01

INSTALLATION OF THE AKRAPOVIČ EXHAUST SYSTEM:

1. Install the clamp from Akrapovič installation kit onto the muffler's inlet, as shown **(F 02)**.

! CAUTION: be careful not to injure yourself or damage any part of the muffler during this procedure!

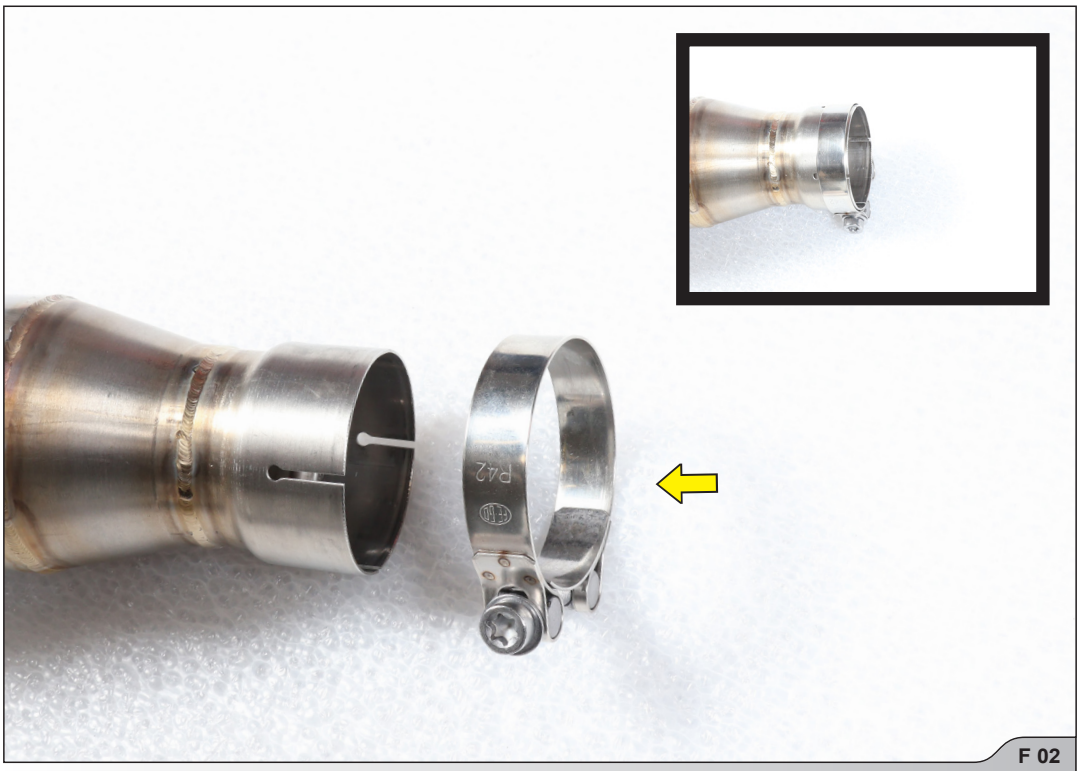

F 02

2. Carefully install the muffler onto the motorcycle, align the muffler in respect to the motorcycle and tighten the muffler's bracket using bolt, washers and nut from Akrapovič installation kit **(F 03).**

! CAUTION: be careful not to injure yourself or damage any part of the motorcycle during this procedure!

F 03

3. Tighten the clamp to the specified torque **(F 04).**

! CAUTION: be careful not to injure yourself or damage any part of the motorcycle during this procedure!

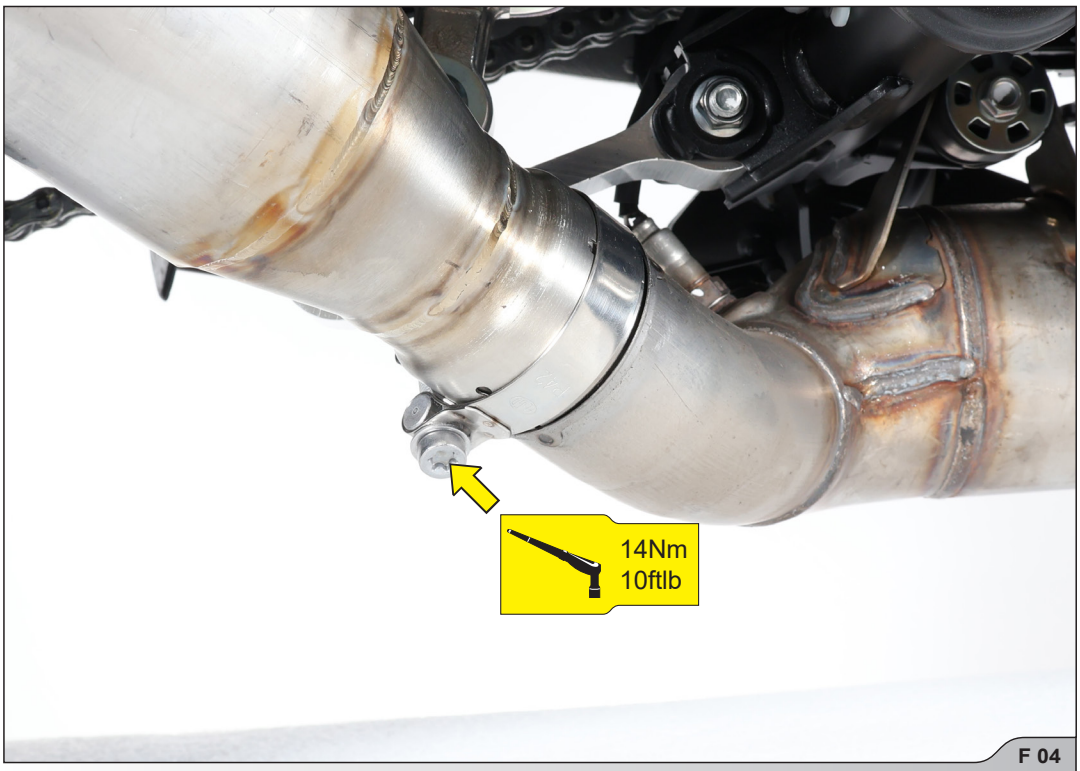

F 04

FINAL INSTALLATION:

1. In case any component of the Akrapovič product is equipped with DMC code sticker, the sticker and glue residue should be removed from the component, before first use!

2. Clean grease spots off all Akrapovič product's surfaces, when installation is finished. Cleaning will prevent spots from burning onto the surface. Do not use aggressive chemical cleaners, because they can damage the surface or stickers:
   - **Titanium surfaces** (titanium muffler's outer sleeve, titanium pipes etc): use a soft cloth sprayed with a multi-purpose spray lubricant (WD-40® or equivalent)*, then wipe with a soft dry cloth.
   - **Carbon-fiber surfaces** (carbon-fiber outlet cap, carbon-fiber muffler's outer sleeve, carbon-fiber bracket etc): use a soft dry cloth sprayed with all purpose foam cleaner, then wipe with a soft dry cloth.
   - **Painted surfaces** (painted outlet cap, painted muffler's outer sleeve, painted bracket etc): use a soft cloth sprayed with all purpose foam cleaner, then wipe with a soft dry cloth.
   - **Chrome plated surfaces** (chrome plated outlet cap, chrome plated muffler's outer sleeve etc): use a soft cloth sprayed with all purpose foam cleaner, then wipe with a soft dry cloth.
   - **Stainless steel surfaces** (stainless steel muffler's outer sleeve, stainless steel pipes etc): use a soft cloth sprayed with a contact cleaner, then wipe with a soft dry cloth.

   *WD-40® is a trademark of the WD-40 Company.

3. Make sure all the nuts and bolts are sufficiently tightened. In case the Akrapovič product touches the cowling or other parts, repeat the adjustment of the product or contact your authorized dealer.

4. Reinstall all dismounted or partially removed stock parts (cowlings, radiator etc); check vehicle manufacturer workshop manual for correct procedures and tightening torques.

MAINTENANCE OF THE AKRAPOVIČ PRODUCT:

! **IMPORTANT: periodically make sure all the bolts and springs are sufficiently tightened. In case the product touches the cowling or other parts repeat the adjustment of the product or contact your authorized dealer!**

! **CAUTION: after running engine for 30 minutes, retighten the bolts of the Akrapovič carbon-fiber heat shield!**

! **IMPORTANT: IT IS NORMAL IF WHITE SMOKE COMES OUT OF THE MUFFLER DURING THE FIRST 100 KM AFTER REPLACEMENT.**

! **IMPORTANT: A CHANGE IN THE COLOR OF THE EXHAUST SYSTEM IS NORMAL DUE TO THE HIGH TEMPERATURES.**

! **CAUTION: DO NOT STAND BEHIND THE MUFFLER AT ANY TIME.**

! **IMPORTANT: DO NOT USE AUTOMOTIVE WHEEL CLEANERS OR ANY CLEANING PRODUCTS WHICH CONTAIN ACIDIC ADDITIVES TO CLEAN AKRAPOVIČ PRODUCTS.**

! **IMPORTANT: WE RECOMMEND HIGH CAUTION WHEN USING POWER / PRESSURE WASHER FOR CLEANING PAINTED / LACQUERED SURFACES OF THE AKRAPOVIČ PRODUCTS, TO AVOID PAINT / LACQUER DAMAGE.**

! **IMPORTANT: ALL AKRAPOVIČ PRODUCTS ARE DEVELOPED AND DESIGNED TO BE USED ON SPECIFIC VEHICLES, FOR THEIR ENTIRE EXPECTED LIFETIME. PLEASE MAKE SURE THAT END-OF-LIFE AKRAPOVIČ PRODUCT IS DISASSEMBLED TO COMPONENTS SHOWN IN THE PRODUCT'S SCHEMATIC DIAGRAM AVAILABLE ON THE AKRAPOVIČ WEBSITE AND EACH COMPONENT SCRAPPED RESPONSIBLY AND ACCORDING TO APPLICABLE LOCAL LAWS AND REGULATIONS. AKRAPOVIČ DOES NOT ASSUME ANY OBLIGATION OR RESPONSIBILITY WITH RESPECT TO THE SCRAPPING PROCESS OR PROVIDING INFORMATION RELATED THERETO.**

! **IMPORTANT: IN CASE OF CONTAMINATION WITH GASOLINE, ALL PAINTED/LACQUERED SURFACES OF THE AKRAPOVIČ COMPONENTS MUST BE WIPED WITH SOFT, ABSORBENT CLOTH IMMEDIATELY!**

TROUBLESHOOTING:

Problem	Possible cause	Solution
Exhaust gas leaks out of the muffler/pipe clamp connections	loosened clamp	tighten the clamp to specified torque
	connection is not completely joined	tap the connection into place and tighten the clamp to specified torque