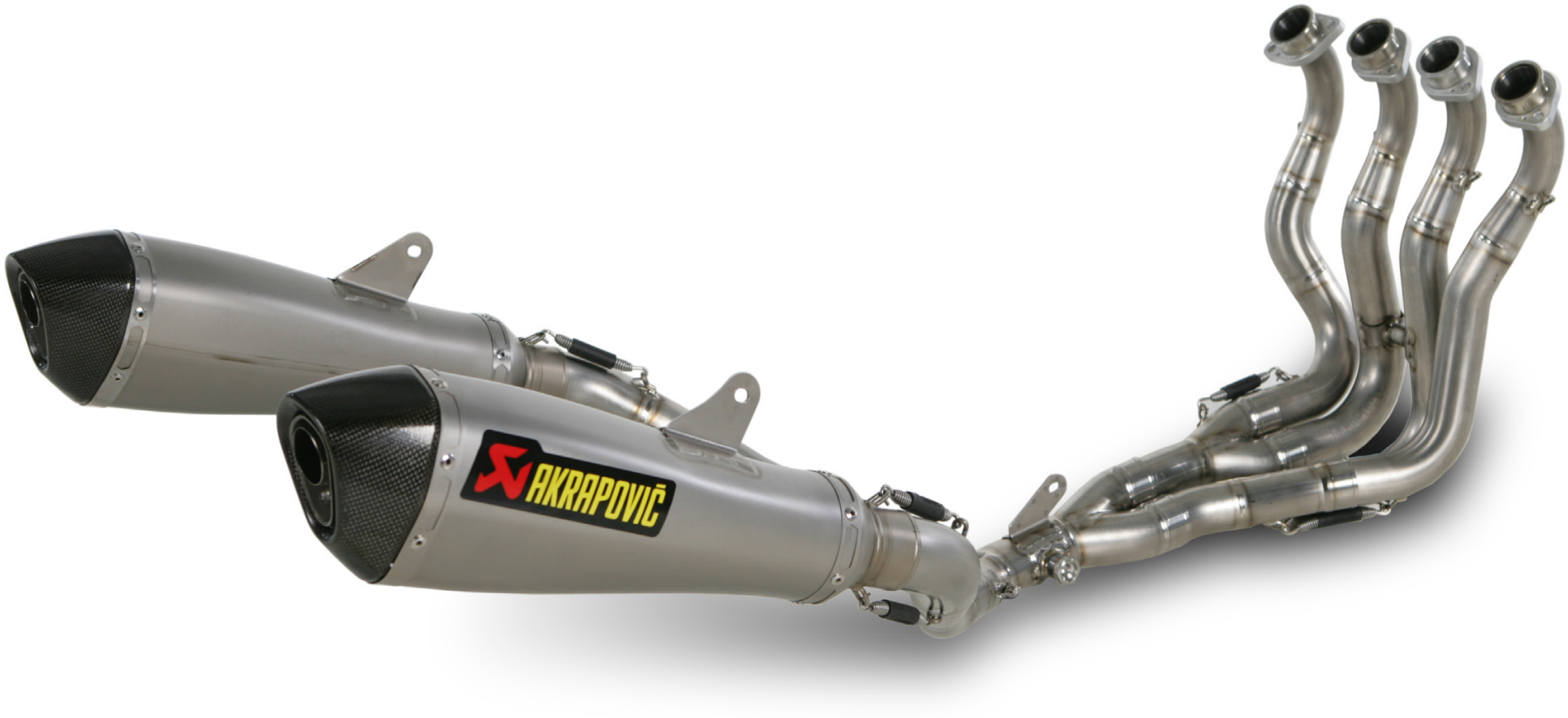

www.akrapovic.com

SUZUKI GSX-R 1000

EVOLUTION TWIN - CONICAL SHAPED (CZ TYPE) MUFFLERS EXHAUST SYSTEM

Akrapovic Evolution system with conical mufflers is designed for riders who demand maximum performance from their motorcycle. System is significantly lighter if compared to stock exhaust system and feature exceptional production quality, hi-tech materials and of course increased engine performance combined with pure racing sound output and aesthetic improvement. The system was developed to complement the racing character of the GSX-R and is made entirely of our exclusive high grade titanium. System is not street legal and designed for racing purpose only.

PERFORMANCE

Measurements of the Akrapovic EVOLUTION system with conical mufflers on the SUZUKI GSX-R1000 (without muffler insert):

Power & Torque: The power increase with the Akrapovic system is substantial, and can be seen from 5000 rpm right to the top of the range. At 12360 rpm we measured 178.3 HP, with max. increased power of 14 HP at 12900 rpm. The system's effect on the torque and power curve is huge and strongest in midrange rpm. The main increase starts at around 4500 rpm and continues right into the over-rev range. All this will help you shave lap times and result in much smoother ride.



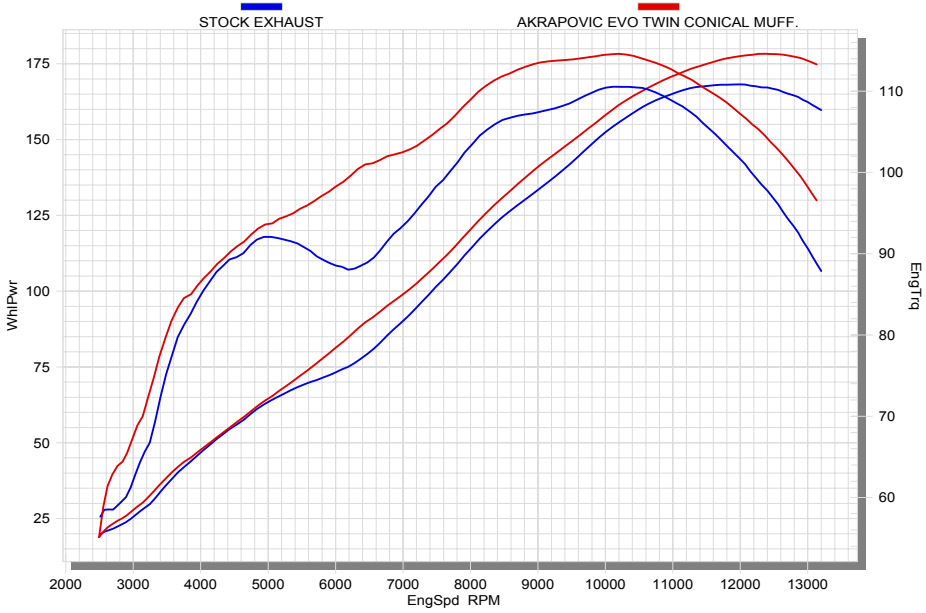

	PERFORMANCE		
	stock	**AKRAPOVIC**	**max. increased power**
max. rear wheel power HP / rpm (measured on Dynojet ATV)	168.1 / 11900	178.3 / 12360	14 / 12900

	ADDITIONAL DATA				
	stock	**AKRAPOVIC**		**difference**	
weight comparison (kg)	12.7	RACING	EVOLUTION	stock - RACING	stock - EVOLUTION
		0.00	5.59	0.00	7.11

noise measurements (dB / rpm)	**stock**	**AKRAPOVIC**
	96 / 6000	101.6 / 6000
legal for street use	NO	

Technical specifications of Akrapovic exhaust systems and related products subject to change without notice.

Product code: S-S10RFT7T-XT

www.akrapovic.com
Akrapovič d.d. 2009 all rights reserved
06.01.2011

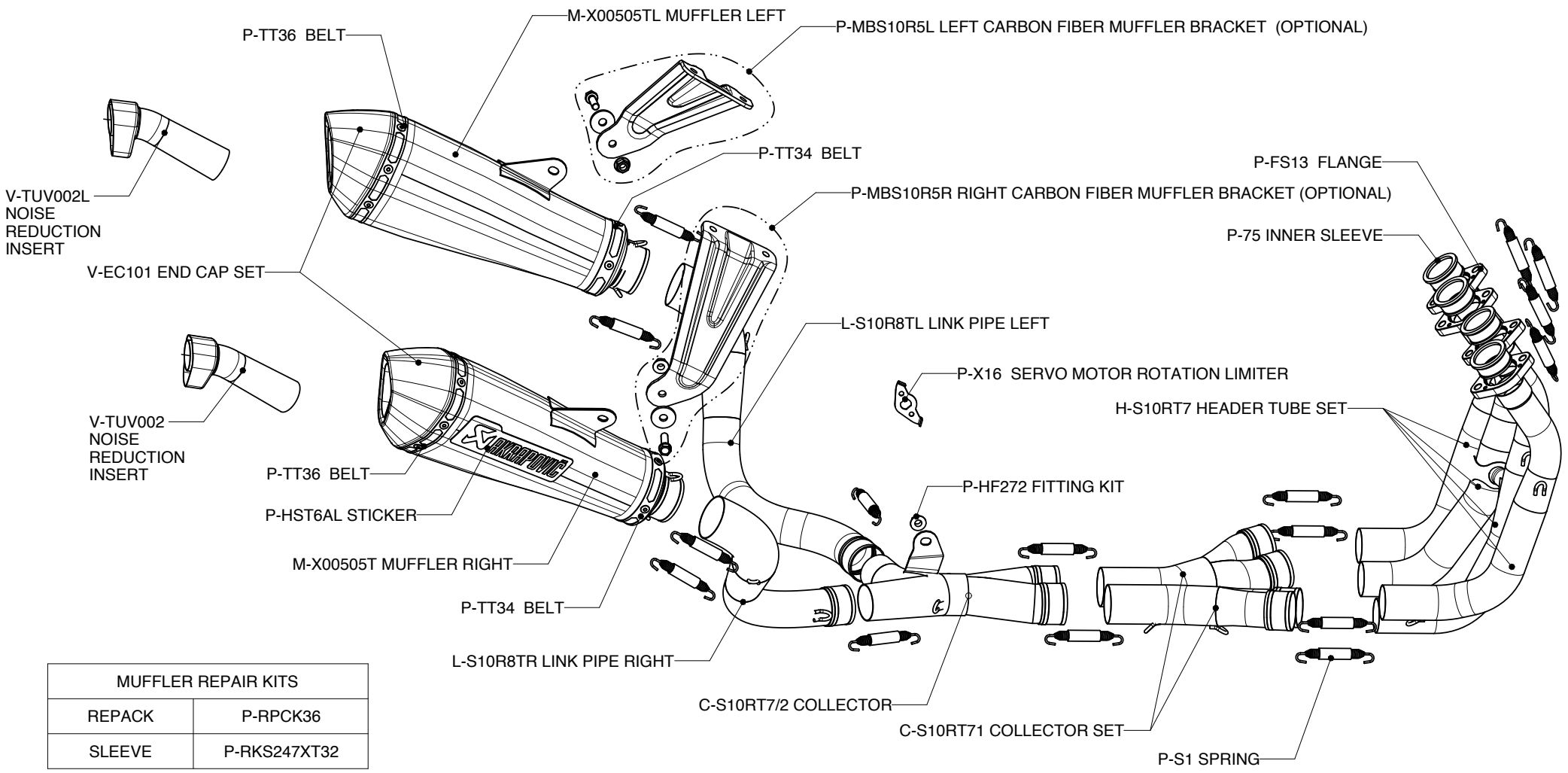

MUFFLER REPAIR KITS	
REPACK	P-RPCK36
SLEEVE	P-RKS247XT32

Product code: S-S10RFT7T-XT

Akrapovič d.d. 2009 all rights reserved
06.01.2011