INSTALATION INSTRUCTIONS FOR
SUZUKI GSX-R 1000

Instructions for removing original exhaust together with the exhaust valve. Removal should be performed only by an authorized service representative.

1. Bridge the service switch.

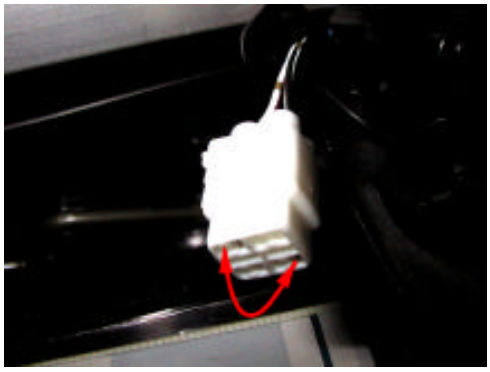

2. Turn the key to position the exhaust valve servo motor in its service position.
3. Switch off the key.
4. Unbridge the service switch.
5. First remove the cables from the exhaust valve, then remove the cables from the exhaust valve servo motor.
6. Cut the black/brown wire, making sure to insulate both ends (use connectors).

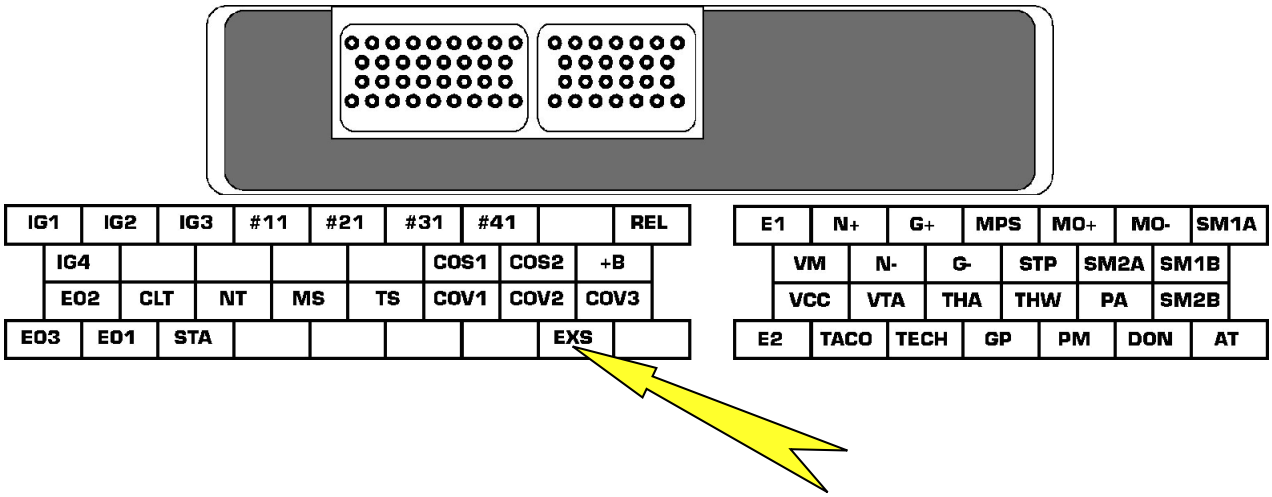



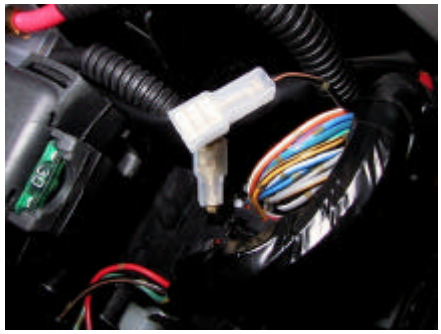

7. Remove the original exhaust system.