Installation instructions:

AKRAPOVIC BOLT-ON & BOLT-ON STREET LEGAL EXHAUST SYSTEM for the SUZUKI GSX-R 600 (2004), GSX-R 750 (2004), GSX-R 1000 (2003, 2004)

Congratulations on purchasing an Akrapovic exhaust system. Please read these installation instructions carefully. If you have any trouble installing the system please contact your authorized dealer!

IMPORTANT INFORMATION

Exclusion of Certain Liability

1. The manufacturer, importer or dealer shall not be liable for any incidental damage including personal injury or any other damages caused by improper installation or operation of the Akrapovic exhaust system. When installing the Akrapovic exhaust system be careful that the exhaust system does not touch other parts sensitive to high temperature.

2. Akrapovic makes no representation or warranties with regard to damage caused by the improper installation, use and maintenance of the Akrapovic exhaust system. The warranty is limited to defects recognized by our technical department and to normal use, and excludes items subject to normal wear (gaskets and damping wool). The guarantee is void in case of accident, modification, improper or competition use.

3. Do not attempt to install the Akrapovic exhaust system on a motorcycle for which it was not made or tested by Akrapovic.

4. When the exhaust system gets very hot during operation, be careful not to burn yourself on the exhaust system or parts which are in direct contact with it, even when the motor is not running. Also protect other people, especially children, from the injuries mentioned above.

5. In some cases Akrapovic exhaust system kits contain chemical products (ceramic anti-seizing grease; bolt sealant). Handle with care, do not inhale or swallow. Avoid excessive contact with skin, eyes or mucous membranes. Keep out of reach of children.

6. Technical specifications of Akrapovic exhaust systems and related products subject to change without notice.

Trademarks

The Akrapovic Exhaust System Technology logo is a registered trademark of Akrapovic d.o.o.

Akrapovic website

Information about Akrapovic exhaust systems and related products is available on the Akrapovic website at:
http://www.akrapovic-exhaust.com/

Copyright

No part of the Akrapovic exhaust system or its documentation may be reproduced or distributed in any form or by any means without the prior written authorization of the Akrapovic company.

© Akrapovic, d.o.o. All rights reserved.

Symbols

The following symbols are used throughout these installation instructions:

! CAUTION OR WARNING **INSTALLATION TIP**

INSTALLATION INSTRUCTIONS

BEFORE INSTALLING CHECK SCHEMATIC OF THE EXHAUST SYSTEM!

! IN CASE THAT SOME ITEMS IN THE AKRAPOVIC EXHAUST SYSTEM PACKAGE ARE MISSING PLEASE CONTACT YOUR AUTHORIZED DEALER. KEEP THE SCHEMATIC FOR FUTURE REFERENCE.

! IT IS ESSENTIAL TO READ THESE INSTALLATION INSTRUCTIONS CAREFULLY IN ORDER TO ENSURE PROPER INSTALLATION AND OPERATION OF THE AKRAPOVIC EXHAUST SYSTEM.

! THE EXHAUST SYSTEM CAN BE EXTREMELY HOT. LET THE MOTORCYCLE COOL DOWN BEFORE BEGINNING INSTALLATION.

WE ADVISE YOU TO LEAVE INSTALLATION TO A QUALIFIED SERVICEMAN. IMPROPER INSTALLATION MAY RESULT IN A SHORTER LIFETIME OF THE EXHAUST SYSTEM AND/OR DAMAGE TO THE MOTORCYCLE.

❑ REMOVAL OF STOCK EXHAUST SYSTEM

1. put the motorcycle on a side stand, we recommend a racing stand
2. unscrew and remove bolts from the muffler at the muffler - link pipe (header assembly) connection **(Figure 1)**
3. unscrew and remove the bolt from the metal hanging bracket and remove the muffler **(Figure 2 & 3)**

❑ INSTALLATION OF THE AKRAPOVIC BOLT-ON EXHAUST SYSTEM

installing the muffler:

1. install the copper gasket from the Akrapovic kit in the groove in the CNC ALU flange **(Figure 4)**
2. correctly orient the muffler and place it near the link pipe/header assembly **(Figure 5)**
3. when the muffler and the link pipe are together, attach using the titanium bolts from the Akrapovic kit. Coat each bolt individually with bolt sealant before installing. **(Figure 6)** Tighten the bolts only hand tight – do not fully tighten! **(Figure 7)**
4. correctly position the carbon-fiber clamp and slide it onto the muffler - bear in mind the **left offset** of the carbon-fiber clamp viewed from the rear **(Figure 8).** WARNING: open the clamp to slightly wider than the diameter of the outer sleeve of the muffler – do not scrape it along the muffler outer sleeve! **(Figure 9)**
5. tighten the carbon-fiber clamp onto the stock bracket on the frame – use the stock bolts or the replacements from the Akrapovic kit, if supplied **(Figure 10)**
6. make sure that the BOLT-ON system is not touching any other parts of the motorcycle
7. correct position of the installed Akrapovic BOLT-ON system **(Figure 11)**

final installation:

1. Tighten the titanium bolts on the CNC ALU flange at the muffler – link pipe connection and also tighten the bolts on all of the brackets and clamps to which the exhaust system and the other dismounted parts of the motorcycle are attached
2. clean grease spots:
    a. muffler – titanium outer sleeve: use a soft cloth sprayed with a multi-purpose spray lubricant (WD-40 or equivalent)
    b. muffler – carbon-fiber outer sleeve: use a soft dry cloth

   Cleaning will prevent spots from burning onto the surface. Do not use aggressive chemical cleaners, because they can damage the sticker.
3. **Check the operation of the brakes and suspension. Make sure all the bolts are sufficiently tightened. In case the exhaust system touches the cowling or other parts repeat the adjustment of the exhaust system or contact your authorized dealer.**

! IT IS NORMAL IF WHITE SMOKE COMES OUT OF THE MUFFLER ON FIRST OPERATION.

! DO NOT STAND BEHIND THE MUFFLER ON FIRST OPERATION.

❑ **MAINTENANCE OF THE AKRAPOVIC EXHAUST SYSTEM**

1. Clean the titanium muffler outer sleeve with a multi-purpose spray lubricant (WD-40 or equivalent) and carbon fiber outer sleeve with soft and dry cloth. Do not use aggressive chemical cleaners, because they can damage the sticker. A change in the color of the exhaust system is normal due to the high temperatures.
2. The wearing out of the muffler silencing material depends on the type of the motor and riding style. Contact your dealer/serviceman if visible changes appear on muffler's outer sleeve or the noise level is increased.
3. Periodically check if all the bolts are sufficiently tight.

Photos:

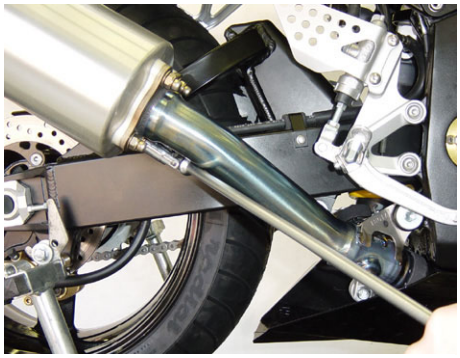

Figure 1



Figure 2



Figure 3



Figure 4



Figure 5



Figure 6

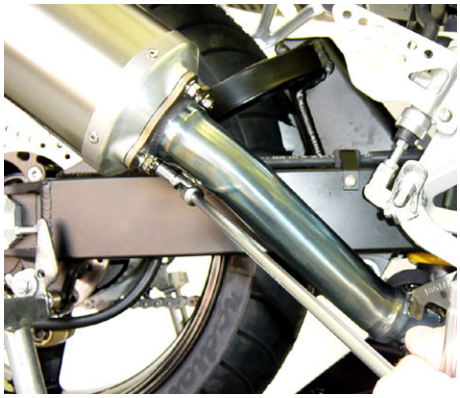

Figure 7



Figure 8

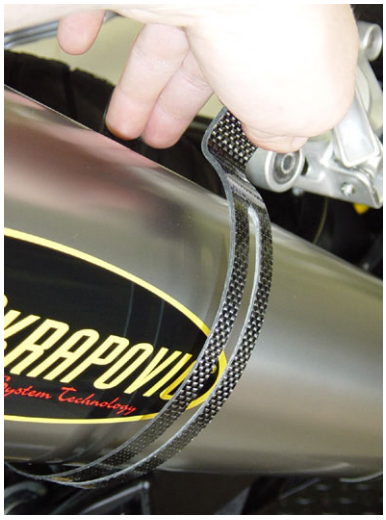

Figure 9

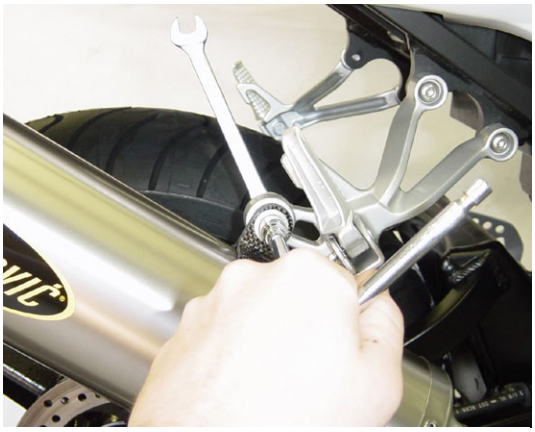

Figure 10



Figure 11

SUZUKI GSX-R600 Bolt-on exhaust system, model year: 2004
GSX-R750 Bolt-on exhaust system, model year: 2004
GSX-R1000 Bolt-on exhaust system, model year: 2003-2004

Product code: 100277 (S-S10BO1-C)
100279 (S-S10BO1-T)

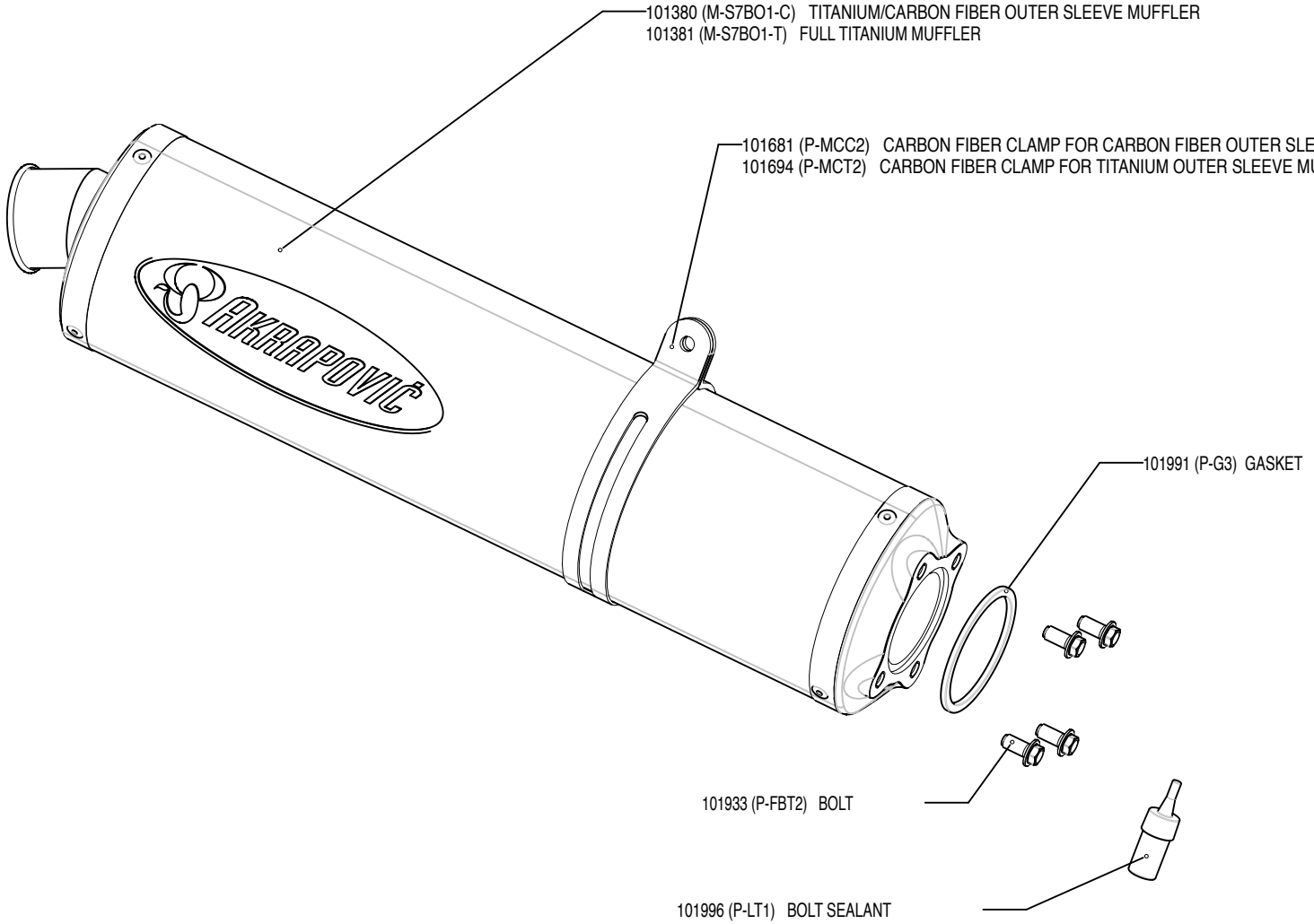

SUZUKI GSX-R600 Homologated/ Bolt-on exhaust system, model year: 2004
GSX-R750 Homologated/ Bolt-on exhaust system, model year: 2004

Product code: 103221 (S-S7BO3-HC)
103222 (S-S7BO3-HT)

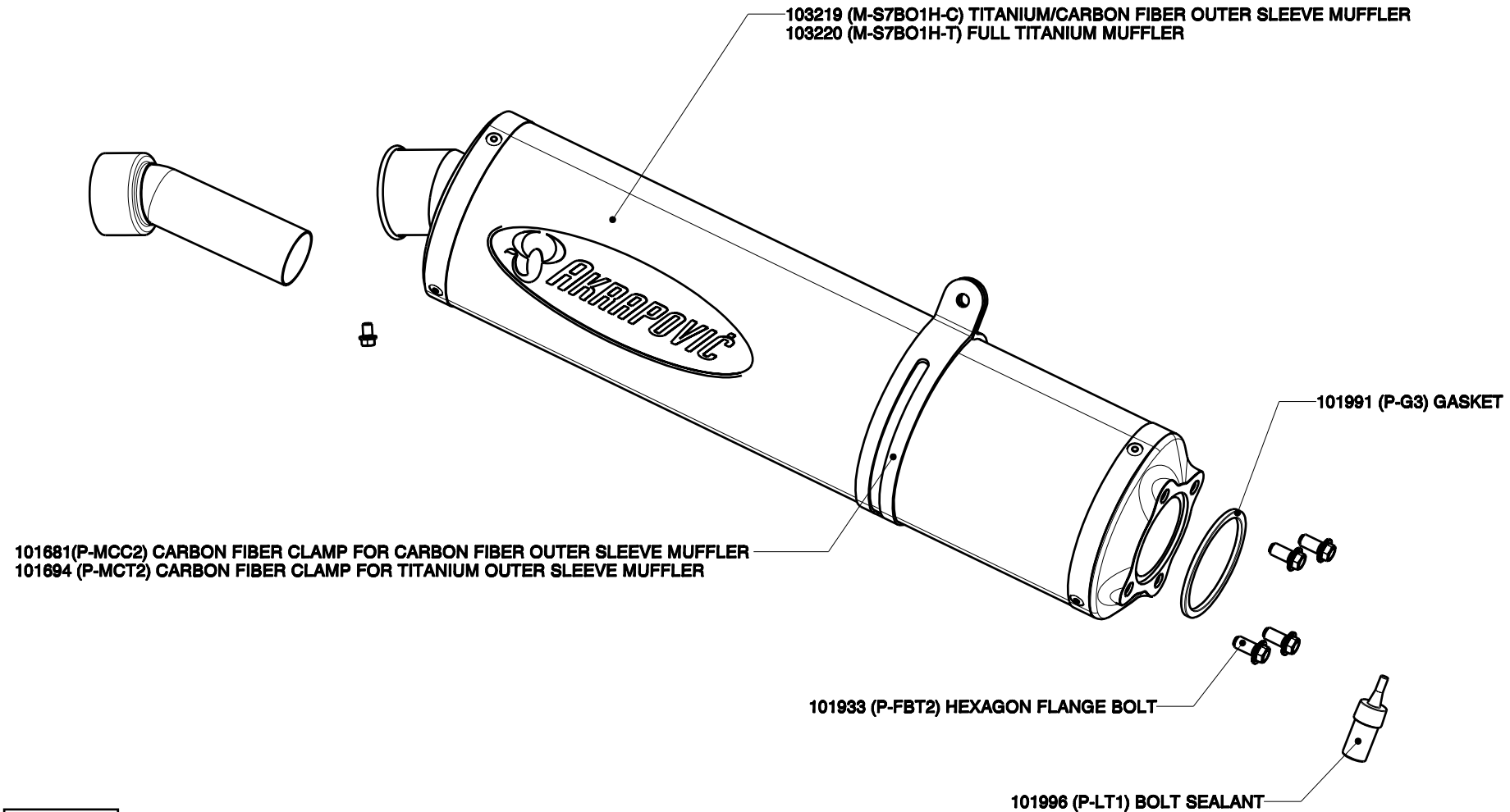

SUZUKI GSX-R1000 Homologated/ Bolt-on exhaust system, model year: 2003, 2004

Product code: S-S10BO1-HC
S-S10BO1-HT

