Installation instructions

Akrapovič Exhaust System

Optional Header

for the

Kawasaki Ninja H2

Kawasaki Ninja H2 Carbon

505764

EN

Revision 1.0 03/2017

www.akrapovic.com

Congratulations on purchasing the Akrapovič exhaust system. The Akrapovič exhaust system is a product of Akrapovič d.d., Malo Hudo 8a, 1295 Ivančna Gorica, Slovenia ("Akrapovič").

Please read this entire installation manual carefully prior to installing and using the Akrapovič exhaust system.

Akrapovič exhaust system should only be installed by persons skilled in motorcycle exhaust system installation and performance. The instructions provided in this manual should be followed to ensure proper installation and safe use of the Akrapovič exhaust system. Akrapovič and/or its partners shall not be held liable for any damage or personal injury (including direct, indirect, or consequential damage) sustained as a result of improper installation of the Akrapovič exhaust system or its use and maintenance contrary to the instructions and warnings contained herein.

If you have any questions regarding the installation and/or proper use of the Akrapovič exhaust system or this manual, please contact your local Akrapovič partner.

For more information on the Akrapovič exhaust systems, see the official Akrapovič website at:
http://www.akrapovic.com

GENERAL INFORMATION

Your safety is our number one priority. Please ride your motorcycle responsibly, safely and always obey local traffic rules.

All statements made with regard to the exhaust system's compliance are made in respect of the exhaust system "as is". Any modifications of the Akrapovič exhaust system or its improper installation, use or maintenance that is not in accordance with this Installation manual, may result in severe damage to the exhaust system and/ or engine, as well as personal injury, and may affect the exhaust system's compliance with the legal requirements, such as exhaust system's air and/ or noise emissions (as an example, the motorcycle may not be suitable for use on public roads any longer), as well as warranty coverage.

The exhaust system may only be used in accordance with relevant laws and regulations, including state and federal, where applicable.

Damage caused by improper installation, use and maintenance of the Akrapovič exhaust system is not covered by the Akrapovič warranty. Please refer to the enclosed warranty with regard to the terms of our warranty.

Technical specifications of Akrapovič exhaust systems and related products are subject to change without notice.

COPYRIGHT AND OTHER RIGHTS NOTICE

The Akrapovič trademark, including corporate logos and emblems, are subject to copyright as well as trademark rights of Akrapovič, its licensors, or third persons authorizing Akrapovič to use them.

Any reproduction, technical or other manipulation, translation, or other use of the copyright and/or trademark rights contained herein is prohibited without the explicit prior written consent of Akrapovič. The same especially applies to the entire contents of this manual and/or any of its parts, including but not limited to technical specifications, instructions, graphs, photographs, and so on included in this manual.

The shape of the exhaust system is protected under a registered Community Design No. RCD 002747303-0001.

Akrapovič takes all copyright and other rights infringement cases under serious consideration. If you have any reason to believe that your exhaust system is not an original Akrapovič product, please contact our local partners or Akrapovič at info@akrapovic.com.

SAFETY AND COMPLIANCE WARNING, PLEASE READ CAREFULLY

BEFORE REMOVING THE STOCK EXHAUST SYSTEM AND BEGINNING THE INSTALLATION OF YOUR NEW AKRAPOVIČ EXHAUST, PLEASE MAKE SURE THAT ALL ITEMS LISTED BELOW ARE VERIFIED:

- THIS MANUAL IS SPECIFIC TO THE MOTORCYCLE INDICATED ON THE COVER PAGE, FOR WHICH IT IS DESIGNED. INSTALLATION PROCEDURES VARY DEPENDING ON THE TYPE OF MOTORCYCLE. PLEASE VERIFY THAT THE AKRAPOVIČ **EXHAUST SYSTEM AND THIS INSTALLATION MANUAL CORRESPOND TO THE TYPE OF YOUR MOTORCYCLE.**
- THE EXHAUST SYSTEM CAN GET EXTREMELY HOT DURING AND AFTER IT IS USED. MAKE SURE NOT TO TOUCH THE EXHAUST SYSTEM UNTIL IT IS COMPLETELY COOL. **ALLOW THE EXHAUST AND ENGINE TO COOL DOWN BEFORE BEGINNING INSTALLATION OR ANY OTHER WORK ON THE EXHAUST SYSTEM.**
- MAKE SURE THE MOTORCYCLE IS **SECURELY POSITIONED TO PREVENT TIPPING OVER** AND DAMAGE TO YOURSELF AND OTHERS, OR THE MOTORCYCLE.
- PLEASE CHECK THE PARTS YOU RECEIVED AGAINST THE PARTS LIST AVAILABLE ON OUR WEBSITE (PLEASE USE THE QR CODE ON THE FRONT PAGE OR LOOK FOR “SCHEMATIC VIEW” IN THE RESPECTIVE PRODUCT PAGE ON WWW.AKRAPOVIC.COM). MAKE SURE THAT YOU HAVE **ALL THE PARTS NECESSARY FOR THE INSTALLATION** OF YOUR NEW AKRAPOVIČ EXHAUST SYSTEM. IF ANY OF THE PARTS IS MISSING, PLEASE DO NOT PROCEED WITH UNINSTALLING YOUR STOCK EXHAUST SYSTEM/ INSTALLING THE AKRAPOVIČ EXHAUST SYSTEM AND CONTACT THE RETAILER WHERE YOU PURCHASED THE AKRAPOVIČ EXHAUST SYSTEM.
- ALWAYS **SECURE YOUR MOTORCYCLE’S GROUND CLEARANCE.** FOR ADVANCED USERS, WE RECOMMEND YOU CHECK THE MOTORCYCLE SPRING PRELOAD SETTINGS TO OPTIMIZE GROUND CLEARANCE WHERE POSSIBLE.
- EVERY EXHAUST SYSTEM MUFFLER HAS ITS UNIQUE SERIAL NUMBER, WHICH IDENTIFIES THE AUTHENTICITY OF THE PRODUCT. YOU CAN FIND THE SERIAL NUMBER ON THE MUFFLER’S INLET PIPE. PLEASE REFER TO THE PICTURE BELOW. PLEASE VERIFY THAT YOUR EXHAUST SYSTEM IS AN ORIGINAL AKRAPOVIČ PRODUCT. IF YOU HAVE ANY DOUBTS, PLEASE CONTACT THE RESELLER WHERE YOU PURCHASED THE EXHAUST SYSTEM OR AKRAPOVIČ PARTNERS. THIS MANUAL, ANY CERTIFICATES AND AKRAPOVIČ WARRANTY APPLY TO ORIGINAL PRODUCTS ONLY.

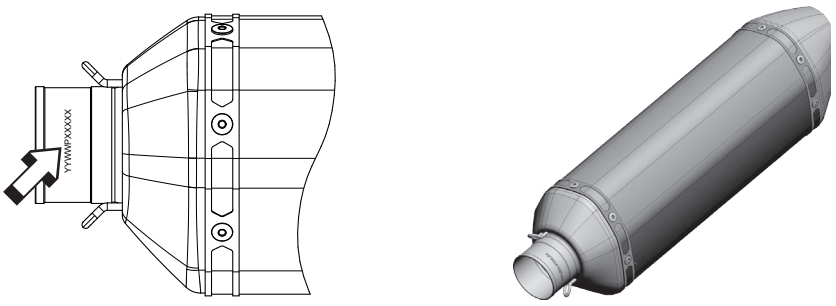

SERIAL NUMBER POSITION

NOISE AND EMISSION WARNINGS

General warning
Because of the world-wide distribution of Akrapovič d.d. products, neither Akrapovič d.d. nor any of its subsidiaries make any representation that the products comply with the air and/or noise emissions laws, or labeling laws, of any jurisdiction. The purchasers are entirely responsible for informing themselves of the applicable laws where the products are to be used and to comply with those law.

Although legal compliance of Akrapovič products in a specific country should be determined by the user, you can find some basic guidance on compliance of your Akrapovič exhaust system with various legal requirements on the product-related part of our website (please use the QR code on the front page or look for the respective product page on www.akrapovic.com). For EC and ECE type approvals, please refer to the certificate enclosed to your product.

USA WARNING

Various U.S. states and the U.S. federal government have individual laws regulating the use of aftermarket exhaust parts and systems, especially as those parts and systems modify, remove, or replace original equipment catalysts. Please consult the appropriate laws in your area before installing any aftermarket part or system on your vehicle to ensure compliance with all applicable laws. Neither Akrapovic d.d. nor any of their subsidiaries or the sellers of the parts or systems make any representation that any of their parts or systems comply with any such laws.

CALIFORNIA WARNING

California laws prohibit the use of any aftermarket exhaust part or system that modifies, removes or replaces original equipment catalysts unless the California Air Resources Board has issued an Executive Order regarding such part or system or unless the part or system is exempted by being used only on racing vehicles on closed courses. Neither Akrapovic d.d. nor any of their subsidiaries make any representation that any of their parts or systems has received such an Executive Order or that any of their parts or systems conform with the racing vehicles exemption. The purchasers are entirely responsible for informing themselves of applicable California laws and to comply with those laws.

GENERAL NOTE

Photographs and other illustrations in this manual are symbolic and are intended to help represent individual steps for proper installation and use, as well as for a general overview. The actual component parts of the Akrapovič exhaust system may not entirely correspond to the photographs and other illustrations.

SYMBOLS

The following symbols are used throughout these installation instructions:



TOOLS AND PROTECTIVE EQUIPMENT REQUIRED



TIGHTENING TORQUE



LUBRICATION



HAND TIGHTEN



INSTALLATION TIP

! **CAUTION OR IMPORTANT**



USE BOLT SEALANT

Apply 3 to 4 small drops of bolt sealant onto the cleaned and degreased threads before tightening the bolts.

WARNING! Avoid contact with skin, eyes and mucous membranes. Do not inhale fumes. Keep out of reach of children.



USE ANTI-SEIZE LEAD-FREE COPPER PASTE (black tube)

Provides trouble-free and long-lasting protection against seizing, corrosion and rusting of bolts, threaded ends, nuts, joints, etc. Also protects against vibration, wear and impact.

WARNING! Avoid eye contact. Keep out of reach of children.



USE ANTI-SEIZING GREASE (white tube)

Prevents seizing, corrosion and excessive wear between the titanium components of your exhaust system.

WARNING! Avoid eye contact. Keep out of reach of children.

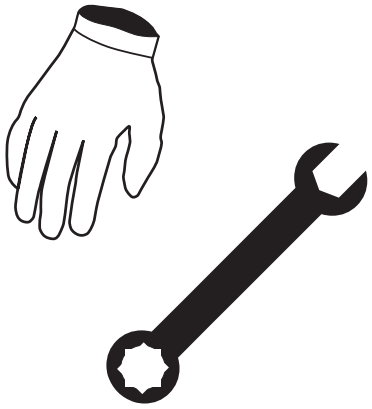

Tools & equipment

- **Security Torx 27**
- **Torx 20**
- **Torx 45**
- **T-handle 10 mm wrench**
- **T-handle 12 mm wrench**
- **T-handle 13 mm wrench**
- **T-handle 14 mm wrench**
- **T-handle 15 mm wrench**
- **T-handle 17 mm wrench**
- **T-handle 4 mm three hexagon wrench**
- **T-handle 5 mm three hexagon wrench**
- **T-handle 6 mm three hexagon wrench**
- **T-handle swivelling 6 mm hexagon wrench**
- **T-handle swivelling 12 mm wrench**
- **T-handle swivelling 13 mm wrench**
- **Combination 10 mm wrench**
- **8 mm hexagon wrench**
- **Phillips Screwdriver**
- **Spring Puller**
- **Rubber Mallet**

PARTS LIST

The following parts should be found in the box:

- Installation Manual
- Homologation certificate/ compliance documents if applicable
- Warranty
- Fitting material
- Muffler and pipes

Detailed list of parts can be found on the Akrapovič website (please use the QR code on the front page or look for “Schematic view” in the respective product page on www.akrapovic.com).

REMOVAL OF STOCK EXHAUST SYSTEM:

The process of uninstalling the original exhaust system may vary depending on the existing exhaust system. Please follow the original exhaust system manufacturer’s instructions for uninstalling the original exhaust system.

If you for any reason decide otherwise, please note that any information provided in this respect herein should be considered as general information provided for your convenience only. Akrapovič shall not assume any liability or responsibility with regard to uninstalling your existing exhaust system, warranty coverage of such exhaust system or vehicle or their further fitness for use.

In case your Akrapovič exhaust system may not be used on certain roads or under certain conditions, please keep the stock or other exhaust system that you can use in such circumstances legally.

REMOVAL OF STOCK EXHAUST SYSTEM:

1. Put the motorcycle on a side stand, we recommend a central racing stand. Make sure, that surface is solid and flat.
2. Remove the Akrapovič **Slip-On** exhaust system off the motorcycle in reverse order, from the order in which it was installed; check the **Slip-On** exhaust system installation instructions for details **(F 01)**.

! **IMPORTANT: be careful not to damage any part of the motorcycle during this procedure!**



F 01

3. Use motorcycle's key to unlock and remove the back rest of the seat **(F 02)**.



F 02

4. Once back rest is removed, unscrew the market bolts. This will enable you to remove leather sitting area **(F 03)**.

! **IMPORTANT: be careful not to damage any part of the motorcycle during this procedure!**



F 03

5. Unscrew the marked bolts in order to remove the left and right side panels (in total 4 panels). Please note that locations of the bolts are simetrical on each side **(F 04)**.

! **IMPORTANT: be careful not to damage any part of the motorcycle during this procedure!**



F 04

6. Further deinstalation requires lifting of the fuel tank cover. Unscrew marked bolts, as shown **(F 05)**.

! **IMPORTANT: be careful not to damage any part of the motorcycle during this procedure!**

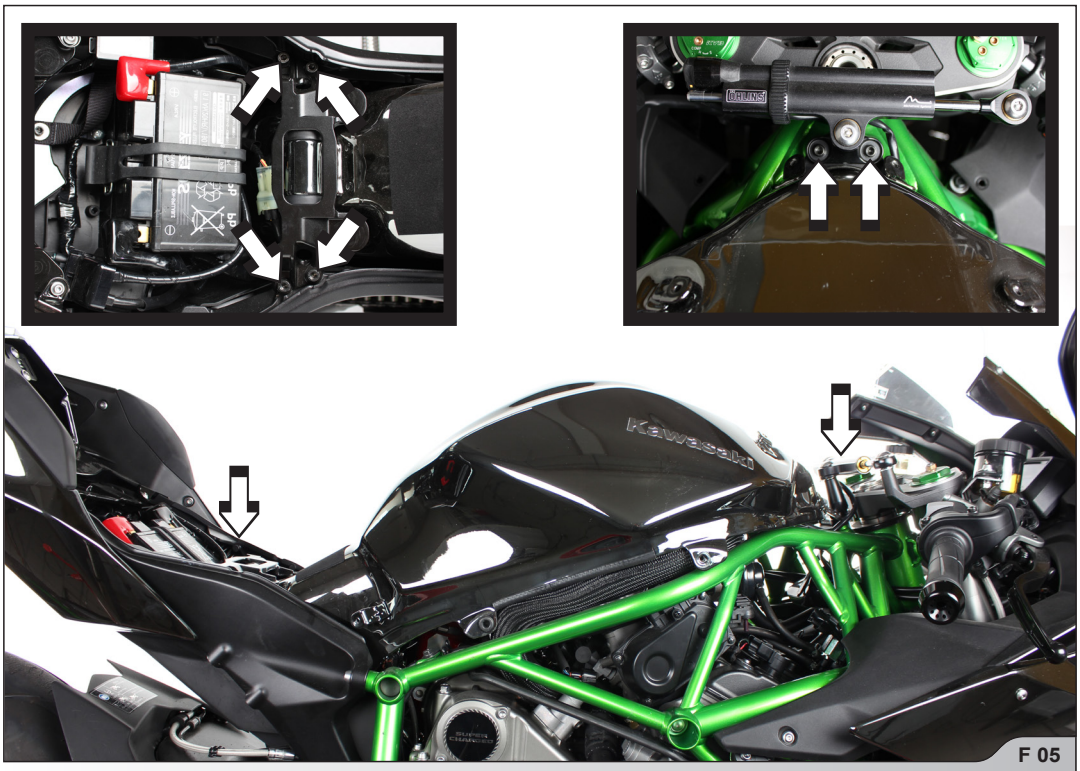

F 05

7. Remove the battery by releasing the spring and unscrewing the negative and positive contact points, as shown **(F 06)**.

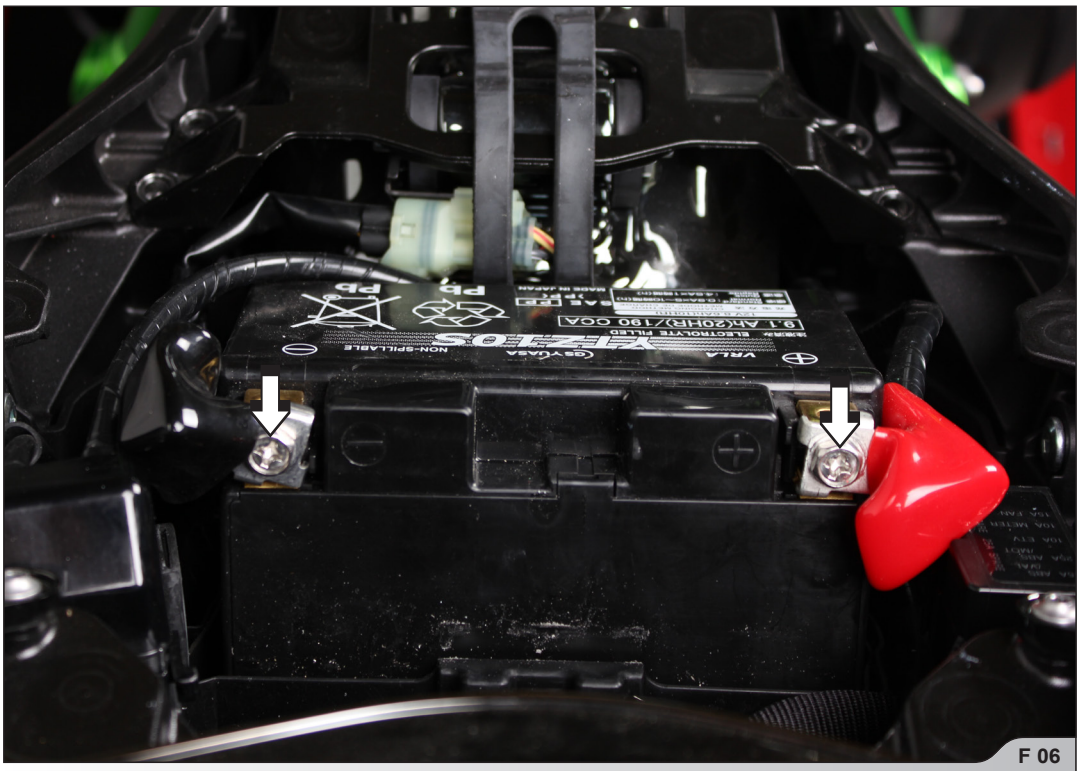

F 06

8. Lift the the fuel tank and support it with some gentle spacer (we used rubber mallet), as shown **(F 07)**.

! **IMPORTANT: be careful not to damage any part of the motorcycle during this procedure!**



F 07

9. Now you have access to the servo motor, which operates the exhaust valves. Unscrew marked bolt and carefully lift up the servo motor's cover **(F 08)**.

! **IMPORTANT: be careful not to damage any part of the motorcycle during this procedure!**



F 08

10. Remove the cable safety protection, unscrew marked bolt and remove the cables **(F 09)**. Note that cables are still fixed on another side to the stock link pipe, which is alright. Link pipe will be removed together with the cables. Reinstall valve's servo motor cover, battery, fuel tank cover, pannels and seat back onto the motorcycle in reverse order from the order in which it was removed.

! **CAUTION: be careful not to injure yourself or damage any part of the motorcycle during this procedure!**

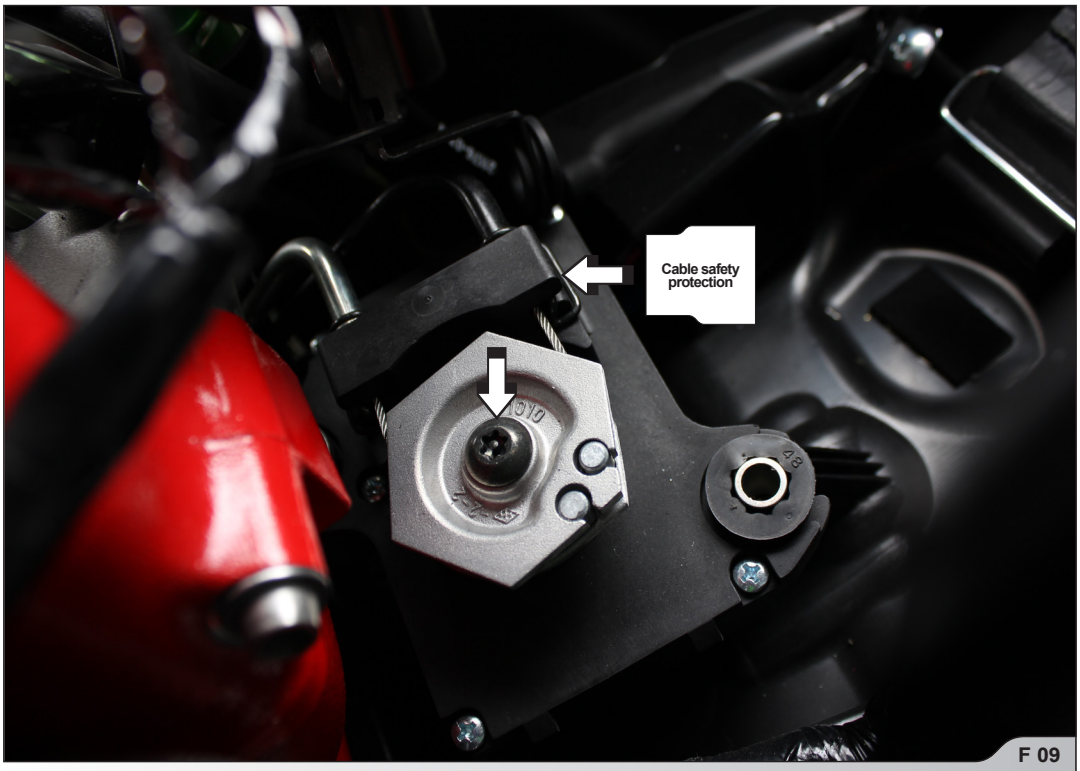

F 09

11. Before completely removing the stock exhaust unscrew lambda sensor and marked bolt **(F 10)**.

! **IMPORTANT: make sure not to damage the lambda sensor's electrical lead during this procedure!**

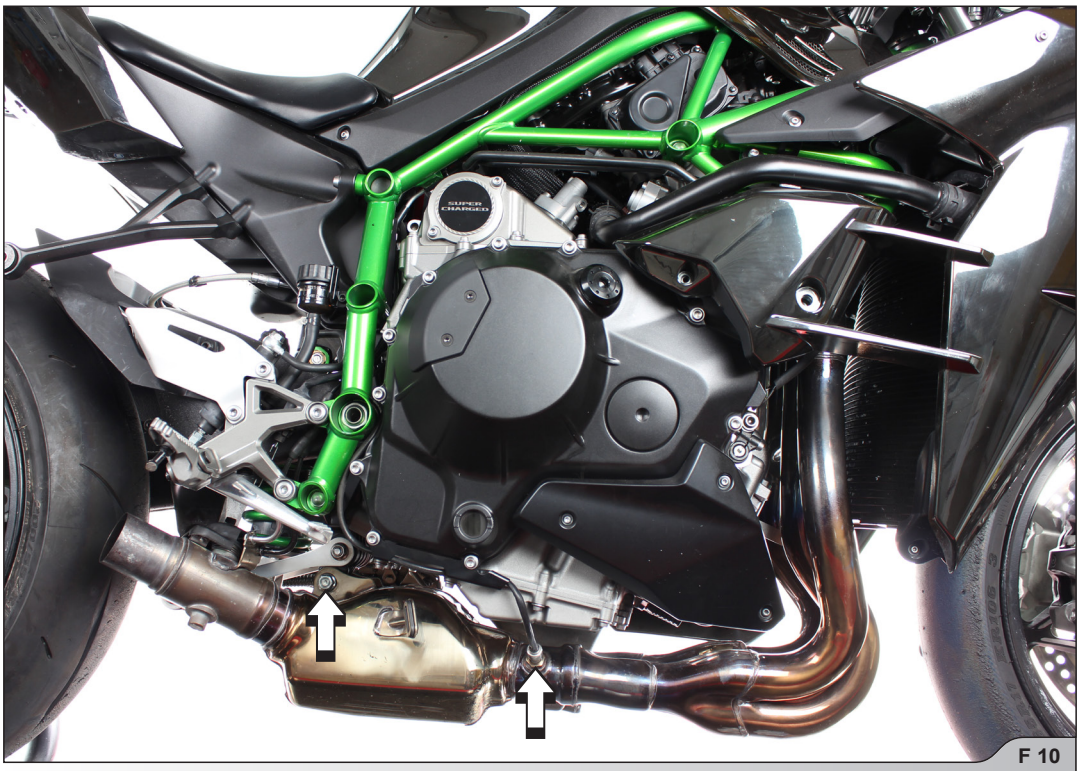

F 10

12. Removal of stock exhaust can be achieved in one single step. Unscrew 8 nuts attaching headers to the motorcycle and carefully remove stock exhaust from the motorcycle **(F 11)**.

! **IMPORTANT: be careful not to damage the radiator or any other part of the motorcycle during this process!**

INSTALLATION TIP: you can protect radiator core with duct tape!

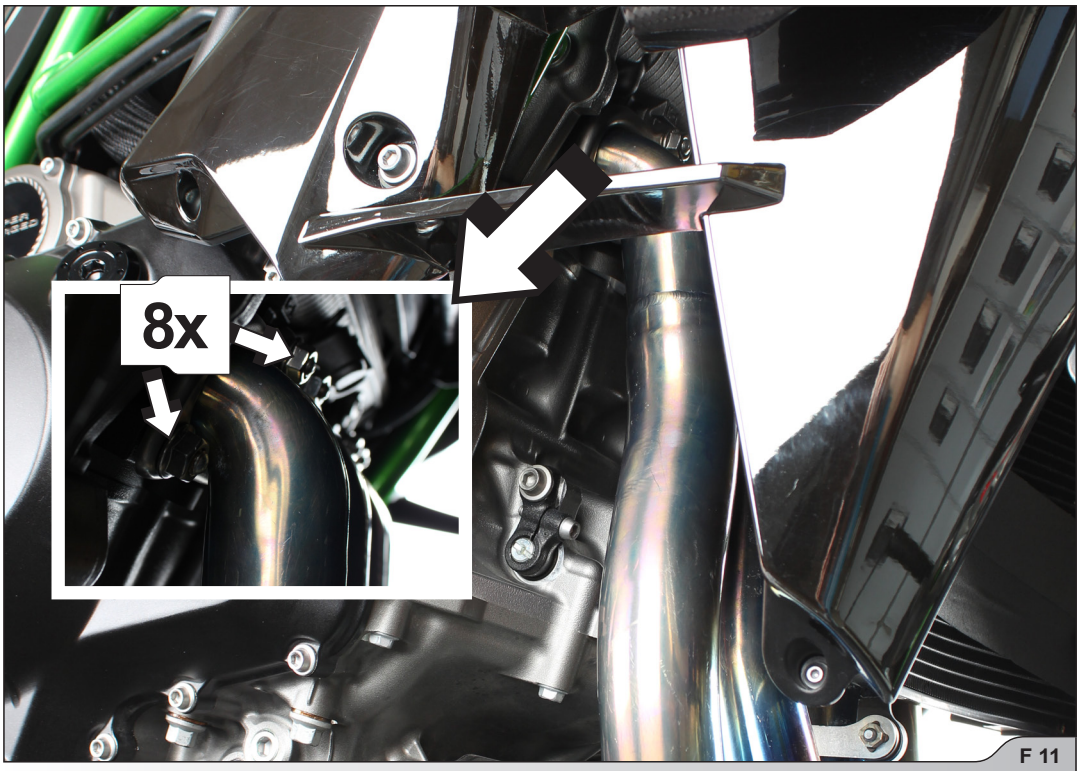

F 11

INSTALLATION OF THE AKRAPOVIČ EXHAUST SYSTEM:

1. Prepaire and position Akrapovič headers correctly onto the cylinder head outlets and slide them in. Hand tighten the headers only **(F 12, 13, 14)**.

! **IMPORTANT: make sure, that springs pull the collectors all the way onto the headers – use rubber mallet if necessary to tap the connections into place!**

INSTALLATION TIP: coat the interior side of the inlet bushes of the titanium collectors with Akrapovič ceramic anti-seizing grease (white tube).



F 12



F 13

! **IMPORTANT: be careful not to damage the radiator or any other part of the motorcycle during this process!**

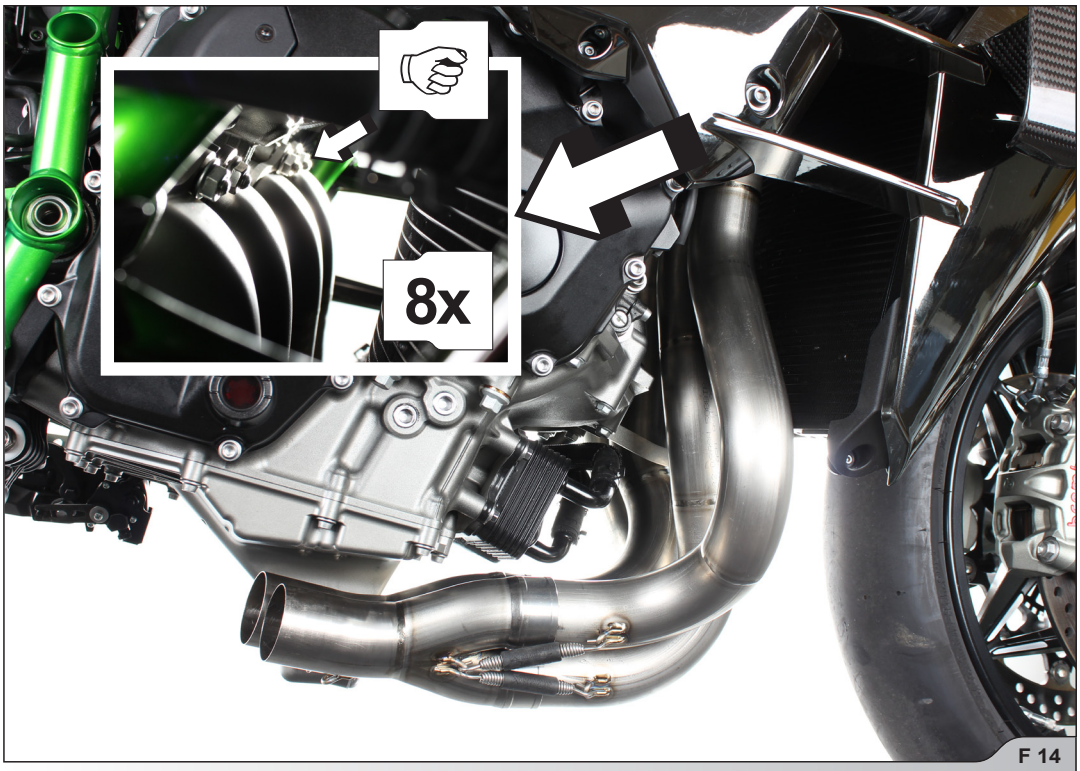

F 14

2. Slide Akrapovič link pipe correctly into the collector´s outlet and attach it with two springs from Akrapovič installation kit **(F 15)**.

! **IMPORTANT: make sure, that springs pull the link pipe all the way onto the collectors – use rubber mallet if necessary to tap the connections into place!**

INSTALLATION TIP: coat the interior side of the inlet bushes of the titanium collectors with Akrapovič ceramic anti-seizing grease (white tube).

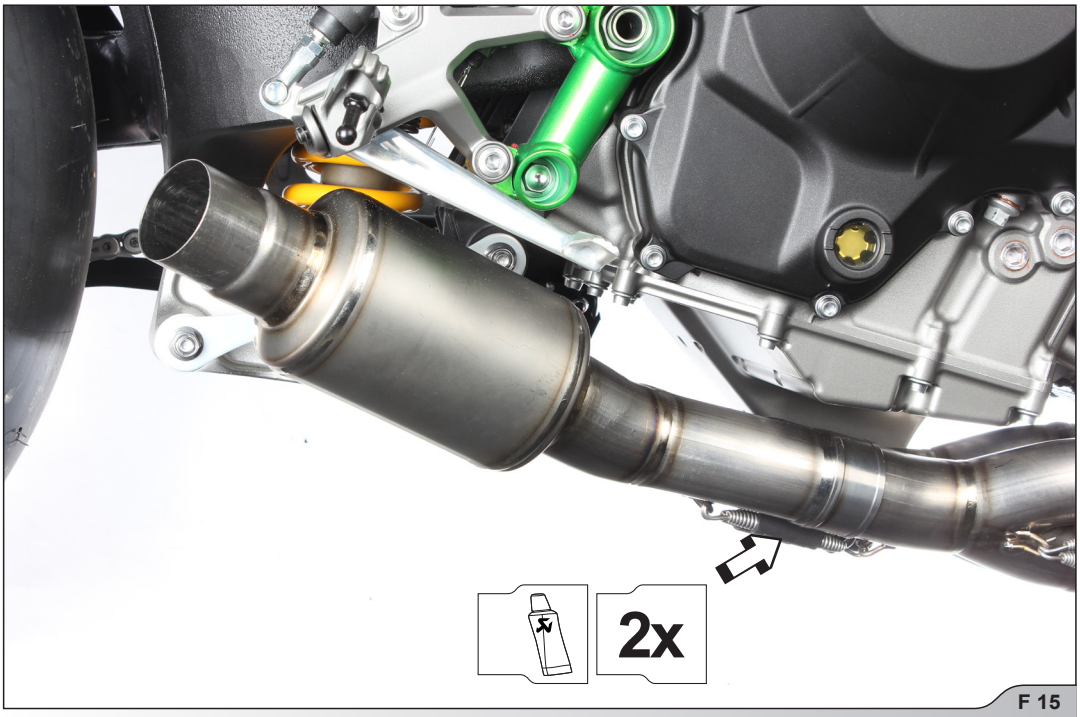

F 15

3. Remove the plug which will be replaced by lambda sensor **(F 16)**.

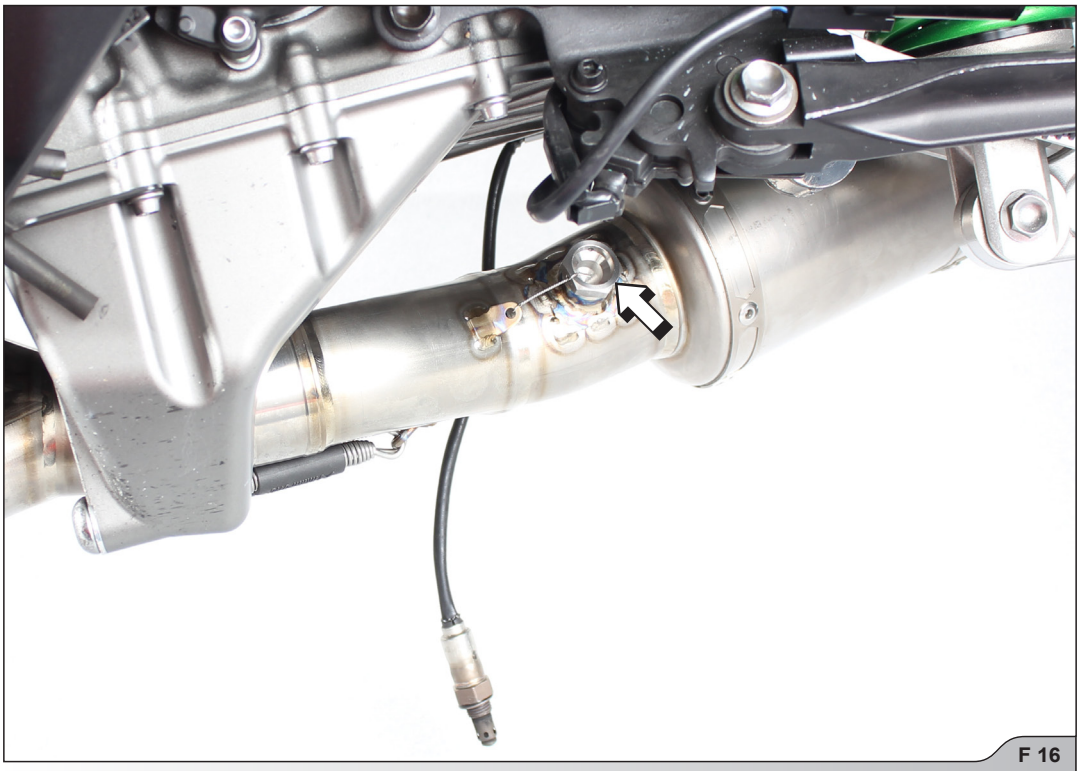

F 16

4. Install the lambda sensor into the link pipe, as shown **(F 17)**.

! **IMPORTANT: make sure not to damage the lambda sensor's electrical lead during this procedure!**

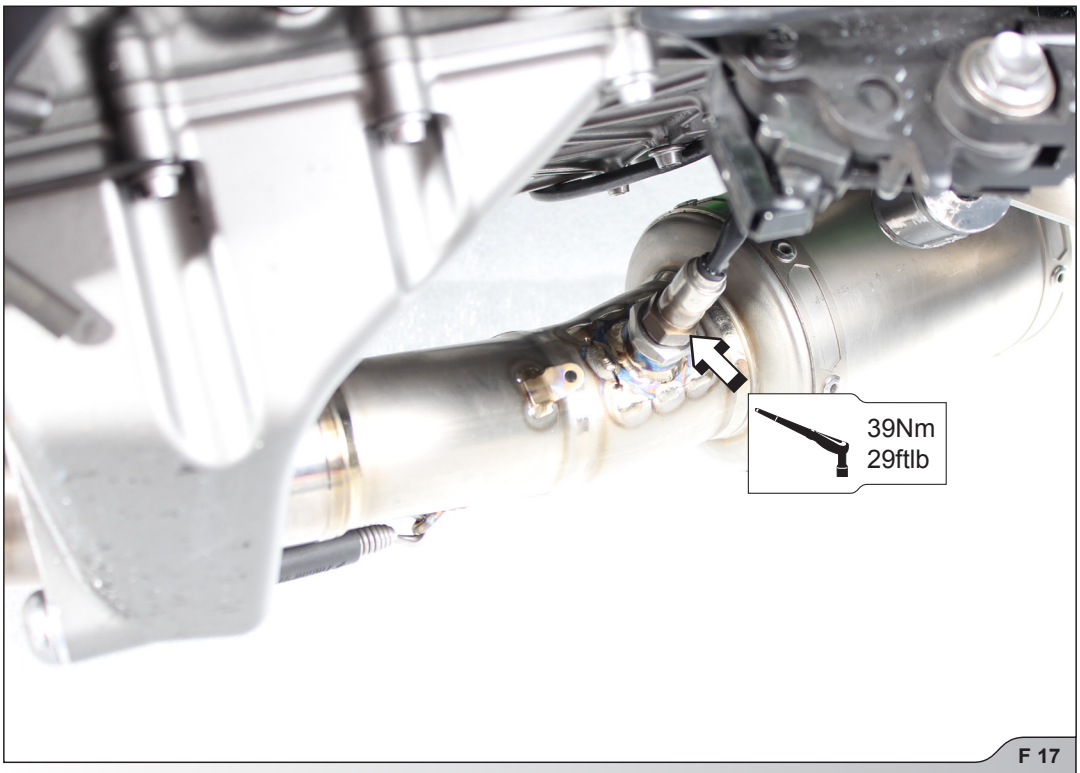

F 17

5. Install the clamp from Akrapovič installation kit onto the muffler's inlet, as shown **(F 18)**.



F 18

6. Position the muffler correctly and slide it onto the outlet of the link pipe. Align the muffler in respect to the motorcycle and tighten the muffler bracket using material from Akrapovič installation kit (bolt, washers and nut) **(F 19)**.

! **CAUTION: be careful not to injure yourself or damage any part of the motorcycle during this procedure!**

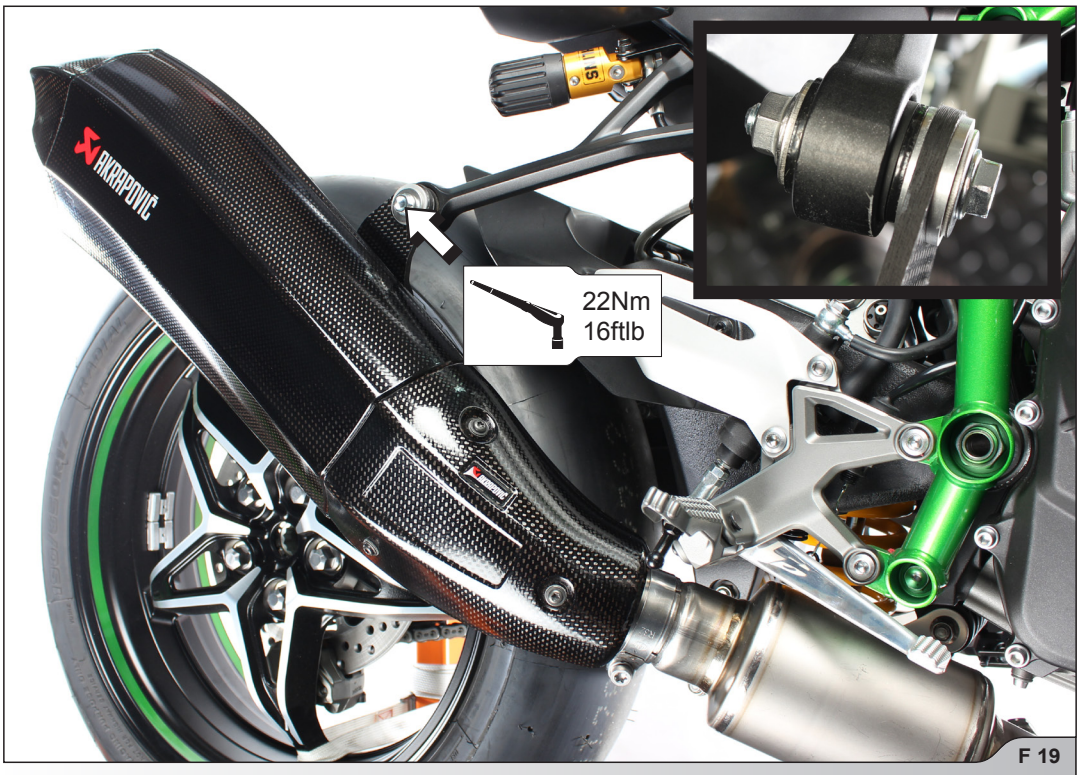

F 19

7. Tighten the connection clamp and header flanges to the specified torques **(F 20, 21)**.

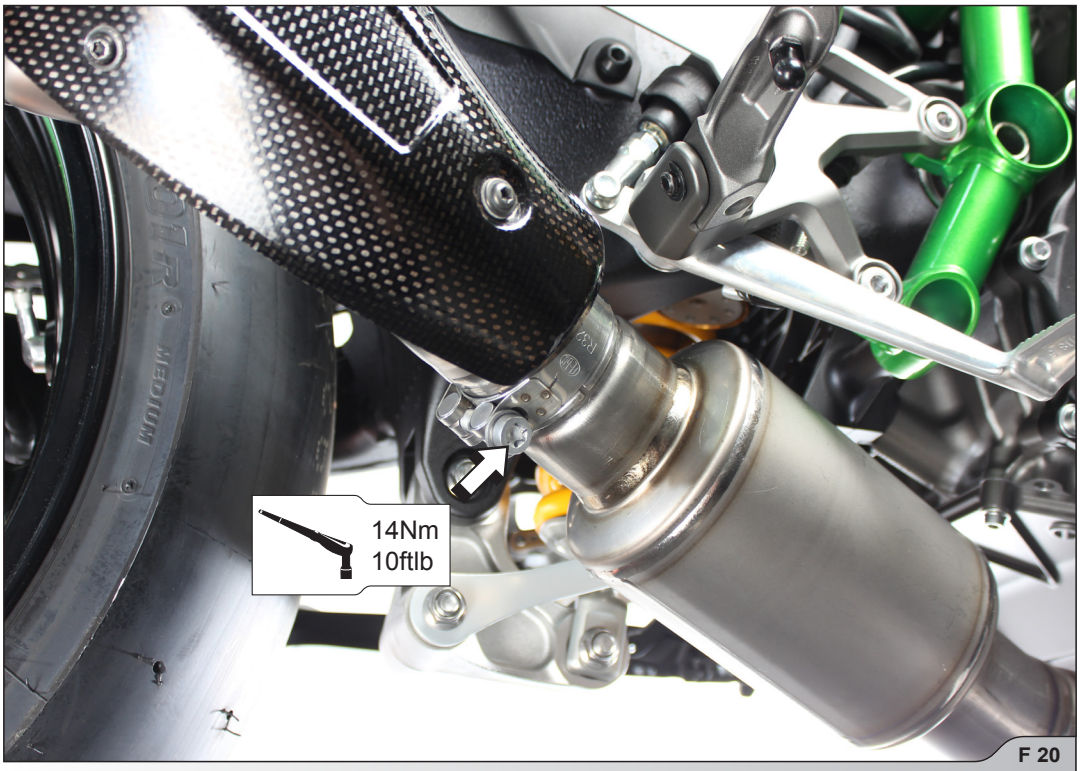

F 20

! **IMPORTANT: remove all the duct tape from radiator's core, if you used it!**

! **IMPORTANT: be careful not to damage the radiator or any other part of the motorcycle during this process!**

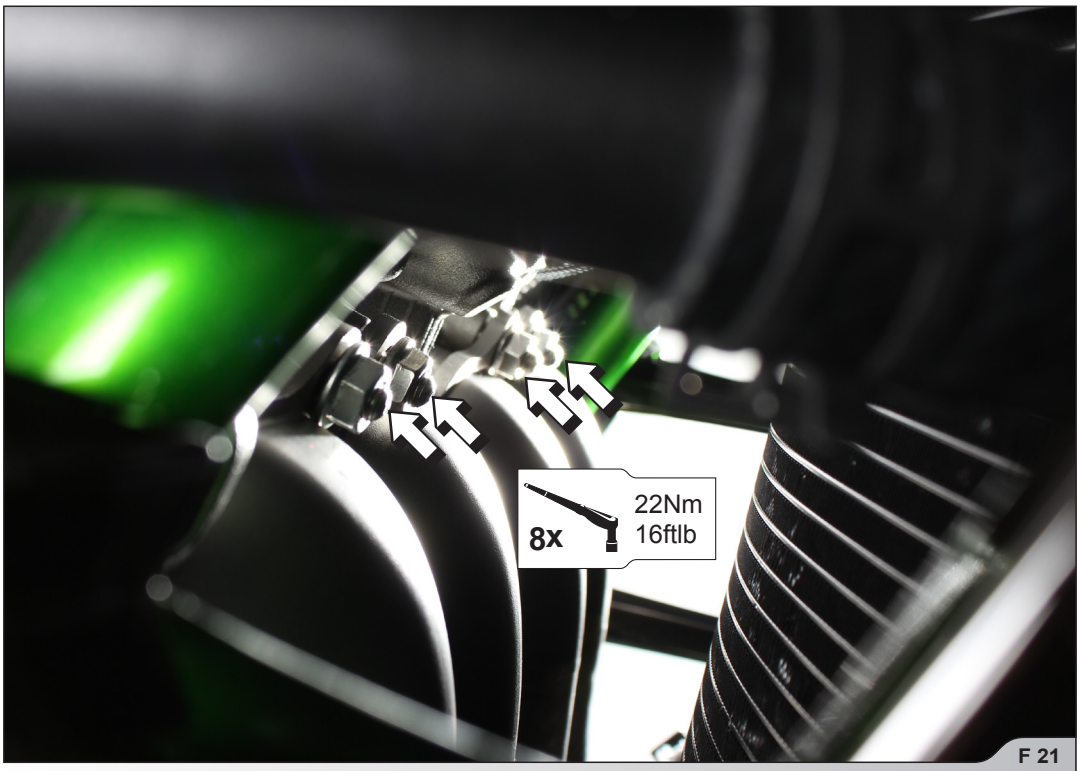

F 21

8. Remove marked warning sticker “DO NOT UNFASTEN” from the muffler, before first use **(F 22)**.

! **IMPORTANT: do not untighten glued muffler bracket bolts in any case!**



F 22

FINAL INSTALLATION AND MAINTENANCE:

Clean grease spots off all exhaust system surfaces, when installation is finished. Cleaning will prevent spots from burning onto the surface. Do not use aggressive chemical cleaners, because they can damage the surface or sticker.

1. Muffler – titanium outer sleeve: use a soft cloth sprayed with a multi-purpose spray lubricant (WD-40® or equivalent)*.
2. Muffler – carbon-fiber outer sleeve: use a soft dry cloth sprayed with all purpose foam cleaner, then wipe with a soft dry cloth.
3. Muffler – carbon-fiber outlet cap: use a soft dry cloth sprayed with all purpose foam cleaner, then wipe with a soft dry cloth.
4. Painted mufflers and parts – use a soft cloth sprayed with all purpose foam cleaner, then wipe with a soft dry cloth.
5. Chrome plated mufflers and parts: use a soft cloth sprayed with all purpose foam cleaner, then wipe with a soft dry cloth.
6. Stainless steel pipes: use a soft cloth sprayed with a contact cleaner, then wipe with a soft dry cloth.
7. Titanium pipes: use a soft cloth sprayed with a multi-purpose spray lubricant (WD-40® or equivalent)*.

*WD-40® is a trademark of the WD-40 Company.

Periodically make sure all the bolts and springs are sufficiently tight.

! IMPORTANT: make sure all the bolts are sufficiently tightened. In case the exhaust system touches the cowling or other parts repeat the adjustment of the exhaust system or contact your authorized dealer!

! CAUTION: after running engine for 30 minutes, retighten the bolts of the Akrapovič carbon-fiber heat shield!

INSTALLATION TIP: IT IS NORMAL IF WHITE SMOKE COMES OUT OF THE MUFFLER DURING THE FIRST 100 KM AFTER REPLACEMENT.

INSTALLATION TIP: A CHANGE IN THE COLOR OF THE EXHAUST SYSTEM IS NORMAL DUE TO THE HIGH TEMPERATURES.

! CAUTION: DO NOT STAND BEHIND THE MUFFLER AT ANY TIME.

! IMPORTANT: DO NOT USE AUTOMOTIVE WHEEL CLEANERS OR ANY CLEANING PRODUCTS WHICH CONTAIN ACIDIC ADDITIVES TO CLEAN AKRAPOVIČ EXHAUST SYSTEMS.

TROUBLESHOOTING:

Problem	Possible cause	Solution
Exhaust gas leaks out of the muffler/pipe clamp connections	loosened clamp	tighten the clamp to specified torque
	connection is not completely joined	tap the connection into place and tighten the clamp to specified torque