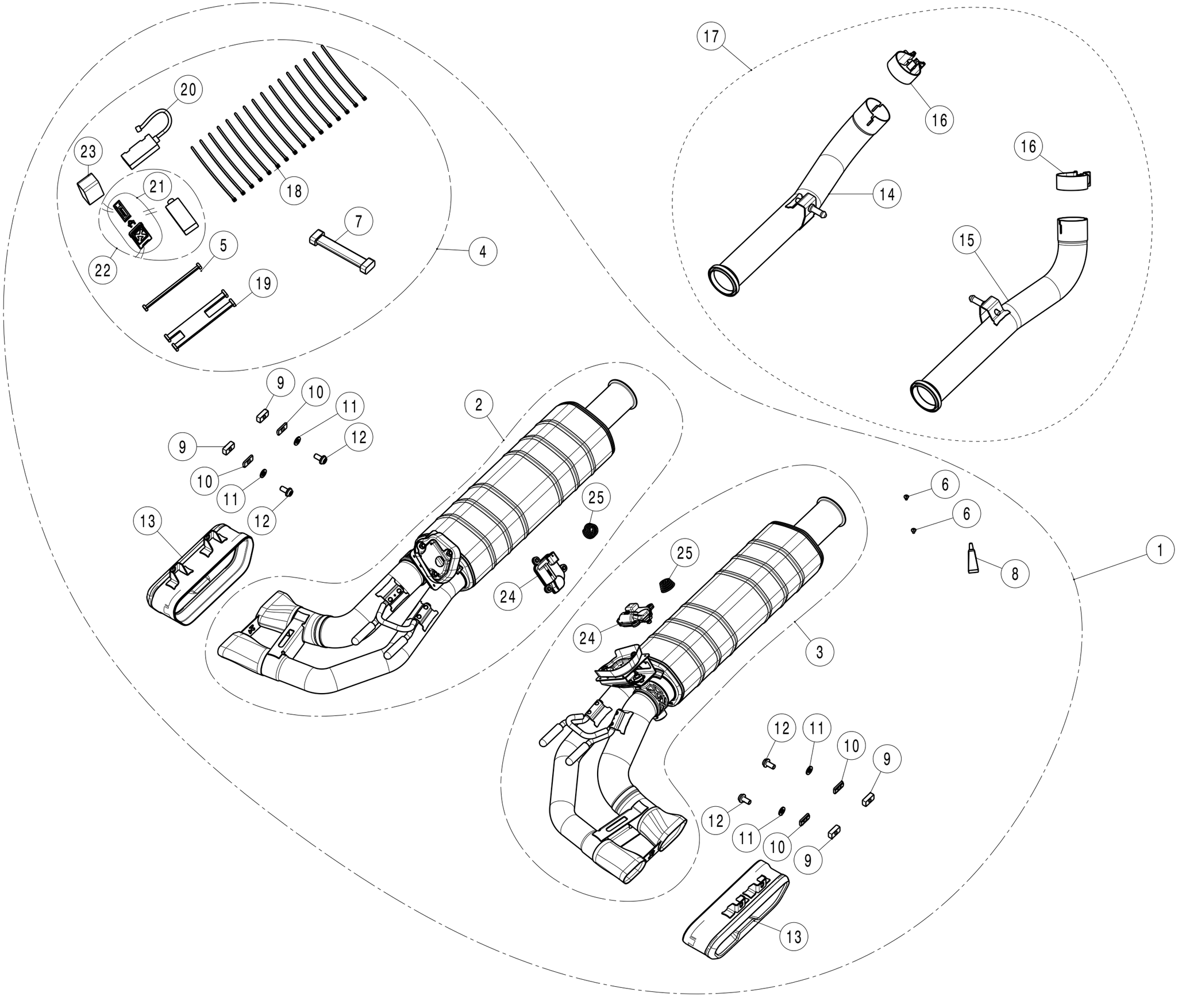
1
2
3
4
5
6
7
8
9
10
11
12
13
14
15
16
17
18
19
20
21
22
23
24
25

No.	SalesCode	Description	Qty.
1	S-ME/T/3	evolution system	1
2	M-ME/T/17/L	muffler	1
3	M-ME/T/17/R	muffler	1
4	P-HF1465	Sound Kit	1
5	P-HF1109	cable/wire harness	1
6	P-BR6	rivet	2
7	P-HF1470	fitting kit	1
8	P-LT1	screw sealant	1
9	P-DR156	distancer (SS)	4
10	P-DR157	distancer (SS)	4
11	P-DR41	washer SS	4
12	P-FB168	bolt	4
13	TP-T/S/24	tail pipe TI	2
14	L-ME/SS/2/L	link pipe SS	1
15	L-ME/SS/2/R	link pipe SS	1
16	P-R68	clamp SS	2
17	L-ME/SS/2	Evolution link pipe set	1
18	P-VEZ2	tie wrap	20
19	P-HF1469	cable/wire harness for control kit	1
20	P-HF936	VTS CAN Sniffer	1
21	P-HF841/2	Key Fob	1
22	P-HF841-A5	Key Fob + Receiver	1
23	P-HF1464	Controller	1
24	P-HF1163	electric actuator	2
25	P-HF1333	lever SS	2