Installation instructions:

502037

AKRAPOVIC SLIP-ON EXHAUST SYSTEM
for the
HONDA CBF 1000 (2008-2009)

Congratulations on purchasing an Akrapovic exhaust system. Please read these installation instructions carefully. If you have any trouble installing the system please contact your authorized dealer!

IMPORTANT INFORMATION

Exclusion of Certain Liability

1. The manufacturer, importer or dealer shall not be liable for any incidental damage including personal injury or any other damages caused by improper installation or operation of the Akrapovic exhaust system. When installing the Akrapovic exhaust system be careful that the exhaust system does not touch other parts sensitive to high temperature.

2. Akrapovic makes no representation or warranties with regard to damage caused by the improper installation, use and maintenance of the Akrapovic exhaust system. The warranty is limited to defects recognized by our technical department and to normal use, and excludes items subject to normal wear (gaskets and damping wool). The guarantee is void in case of accident, modification, improper or competition use.

3. Do not attempt to install the Akrapovic exhaust system on a motorcycle for which it was not made or tested by Akrapovic.

4. When the exhaust system gets very hot during operation, be careful not to burn yourself on the exhaust system or parts which are in direct contact with it, even when the motor is not running. Also protect other people, especially children, from the injuries mentioned above.

5. In some cases Akrapovic exhaust system kits contain chemical products (ceramic anti-seizing grease; bolt sealant). Handle with care, do not inhale or swallow. Avoid excessive contact with skin, eyes or mucous membranes. Keep out of reach of children.

6. Technical specifications of Akrapovic exhaust systems and related products subject to change without notice.

Trademarks

The Akrapovic Exhaust System Technology logo is a registered trademark of Akrapovic d.d.

Akrapovic website

Information about Akrapovic exhaust systems and related products is available on the Akrapovic website at:
http://www.akrapovic.com/

Copyright

No part of the Akrapovic exhaust system or its documentation may be reproduced or distributed in any form or by any means without the prior written authorization of the Akrapovic company.

© Akrapovic, d.d. All rights reserved.

Symbols

The following symbols are used throughout these installation instructions:

! CAUTION OR WARNING

INSTALLATION TIP

TOOLS REQUIRED

TIGHTENING TORQUE



USE BOLT SEALANT; Apply 3 to 4 small drops of bolt sealant onto the cleaned and degreased threads before tightening bolts. **WARNING! Avoid contact with skin, eyes and mucous membranes. Do not inhale fumes. Keep out of the reach of children.**



USE ANTI-SEIZING GREASE (white tube); Prevents seizing, corrosion and excessive wear between the titanium components of your exhaust system. **WARNING! Avoid eye contact. Avoid excessive skin contact. Keep out of the reach of children.**



USE ANTI-SEIZE LEAD-FREE COPPER PASTE (black tube); Provides trouble-free and long-lasting protection against seizing, corrosion and rusting of bolts, threaded ends, nuts, joints, etc. Also protects against vibration, wear and impact. **WARNING! Avoid eye contact. Avoid excessive skin contact. Keep out of the reach of children.**

INSTALLATION INSTRUCTIONS

BEFORE INSTALLING CHECK SCHEMATIC OF THE EXHAUST SYSTEM!

! IF ANY ITEMS IN THE AKRAPOVIC EXHAUST SYSTEM PACKAGE ARE MISSING PLEASE CONTACT YOUR AUTHORIZED DEALER. KEEP THE SCHEMATIC FOR FUTURE REFERENCE.

! THESE INSTALLATION INSTRUCTIONS MUST BE READ CAREFULLY IN ORDER TO ENSURE PROPER INSTALLATION AND OPERATION OF THE AKRAPOVIC EXHAUST SYSTEM.

! THE EXHAUST SYSTEM CAN BE EXTREMELY HOT. ALLOW THE MOTORCYCLE TO COOL DOWN BEFORE BEGINNING INSTALLATION.

WE ADVISE YOU TO LEAVE INSTALLATION TO A QUALIFIED SERVICEMAN. IMPROPER INSTALLATION MAY RESULT IN A SHORTER LIFETIME OF THE EXHAUST SYSTEM AND/OR DAMAGE TO THE MOTORCYCLE.



T-handle 12mm wrench
T-handle 5mm three hexagon key wrench
T-handle 6mm three hexagon key wrench
Combination 12mm wrench
Spring puller

REMOVAL OF STOCK EXHAUST SYSTEM:

1. Put the motorcycle on a side stand, we recommend a racing stand. Make sure, that surface is solid and flat.
2. Unscrew the bolts from the metal clamp at the link pipe - collector joint and remove the bolt from muffler chassis hanging bracket **(Figure 1, 2).** Remove the muffler together with the link pipe **(Figure 3).** Repeat the process on both sides of the motorcycle.



Figure 1



Figure 2



Figure 3

3. Remove the rubber dampers and the metal collars from the muffler brackets **(Figure 4, 5).**



Figure 4



Figure 5

INSTALLATION OF THE AKRAPOVIC SLIP-ON EXHAUST SYSTEM:

1. For easier mounting insert the graphite gasket into the inlet bush of the link-pipe and correctly attach the metal clamp on the inlet bush. Coat the bolt and interior side of the metal clamp with Akrapovic anti-seize lead-free copper paste (black tube) **(Figure 6, 7, 8, 9).**



Figure 6



Figure 7



Figure 8



Figure 9

2. Slide the link pipes onto the stock collector **(Figure 10).** Correctly position the carbon-fiber clamps and slide them onto the mufflers - bear in mind **the left offset** of the carbon-fiber clamp viewed from the rear for right side and **the right offset** for the left side (you should see the yellow stickers – Figure 11)**. WARNING!: open the clamps slightly wider than the diameter of the outer sleeves of the mufflers – do not scrape them along the mufflers outer sleeves! (Figure 11).**



Figure 10



Figure 11

3. Insert the catalyst converters into the mufflers **(Figure 12, 13).**



Figure 12



Figure 13

4. Position the mufflers correctly and slide them onto the outlet side of the link pipes **(Figure 14).** Position and attach the springs **WARNING! make sure, that springs pull the mufflers all the way onto the link pipes – use rubber mallet if necessary to tap the connections into place! (Figure 15).**



Figure 14



Figure 15

5. For the motorcycle **without trunk carrier** you must use stock washer **(Figure 16a).** Insert the Akrapovic aluminium bushes into the muffler brackets **(Figure 16b).** Tighten the muffler clamps to the brackets **(Figure 17, 18, 19).** Tighten the metal clamps at the independent link pipe – stock collector connection **(Figure 20).**



Figure 16a



Figure 16b



Figure 17



Figure 18

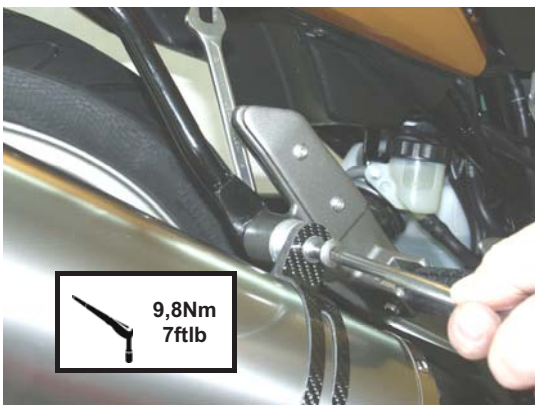

Figure 19

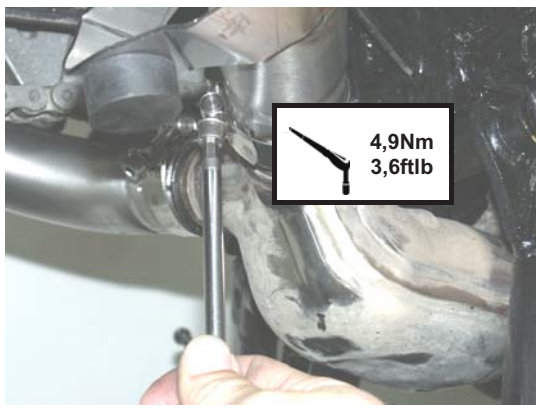

Figure 20

Final installation:

1. Clean grease spots:
   a. Muffler – titanium outer sleeve: use a soft cloth sprayed with a multi-purpose spray lubricant (WD-40 or equivalent).
   b. Stainless steel link pipe: use a soft cloth sprayed with a contact cleaner, then wipe with a soft dry cloth.

   Cleaning will prevent spots from burning onto the surface. Do not use aggressive chemical cleaners, because they can damage the sticker.

Position of the correctly installed Akrapovic **SP series SLIP-ON** system **(Figure 21).**



Figure 21

2. **Check the operation of the brakes and suspension. Make sure all the bolts are sufficiently tightened. In case the exhaust system touches the cowling or other parts repeat the adjustment of the exhaust system or contact your authorized dealer.**

!	**IT IS NORMAL IF WHITE SMOKE COMES OUT OF THE MUFFLER ON FIRST OPERATION.**
!	**DO NOT STAND BEHIND THE MUFFLER ON FIRST OPERATION.**
!	**DO NOT USE AUTOMOTIVE WHEEL CLEANERS OR ANY CLEANING PRODUCTS WHICH CONTAIN ACIDIC ADDITIVES TO CLEAN AKRAPOVIC EXHAUST SYSTEMS.**

MAINTENANCE OF THE AKRAPOVIC EXHAUST SYSTEM

1. Clean the titanium exhaust components with a multi-purpose spray lubricant (WD-40 or equivalent), carbon fiber exhaust components with soft and dry cloth and stainless steel components with soft cloth sprayed with contact cleaner, then wipe with soft and dry cloth. Do not use aggressive chemical cleaners, because they can damage the sticker. A change in the color of the exhaust system is normal due to the high temperatures.
2. The wearing out of the muffler silencing material depends on the type of the engine and riding style. Contact your dealer/serviceman if visible changes appear on muffler's outer sleeve or the noise level is increased.
3. Periodically make sure all the bolts and springs are sufficiently tight.

HONDA CBF1000 Slip-on system, OPEN/ SP SERIES, model year 2008 - 2009

Product code: SS-H10SO5-ST

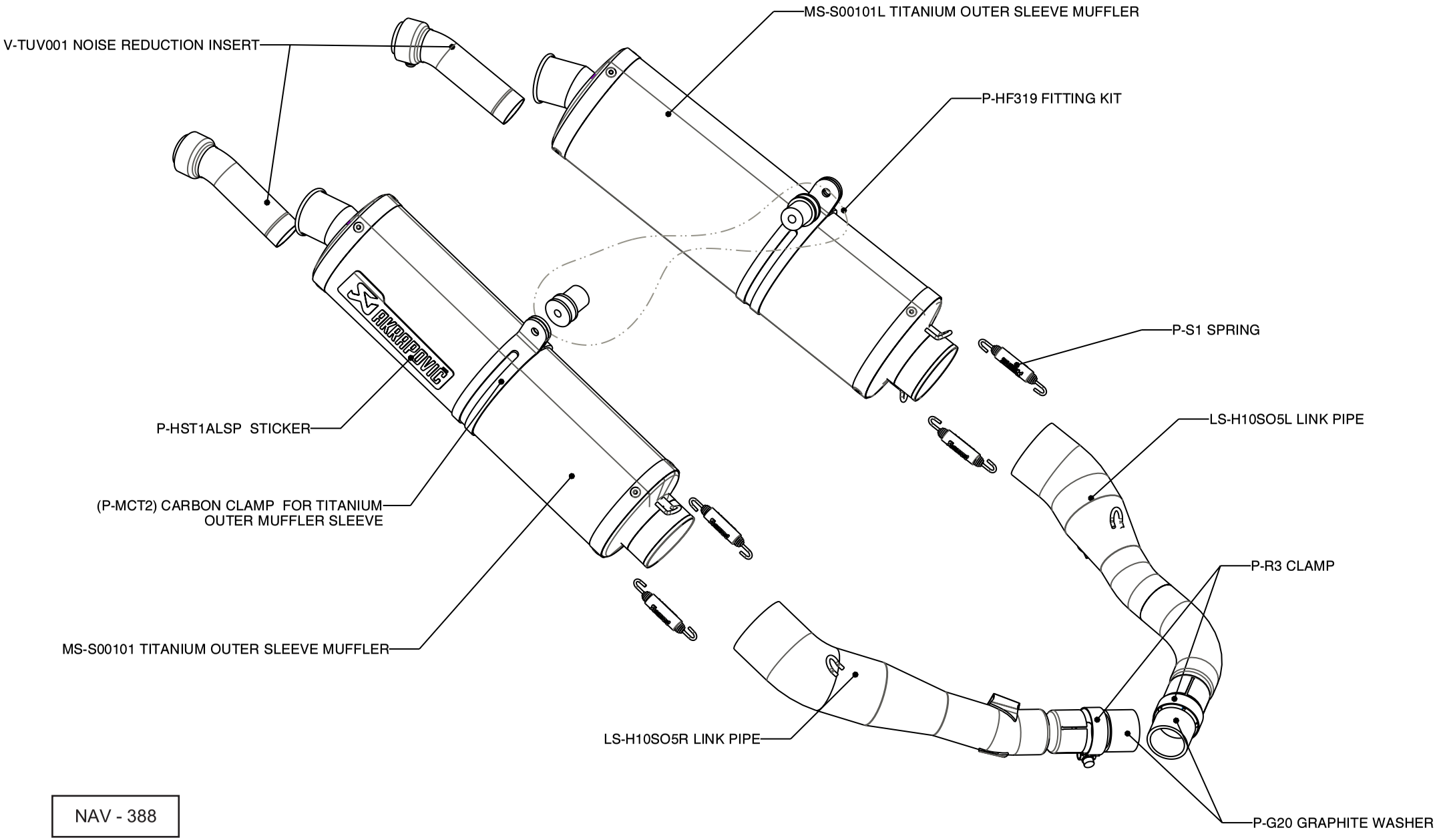

NAV - 388

HONDA CBF1000 Slip-on system, STREET LEGAL/ SP SERIES, model year 2008-2009
Product code: SS-H10SO5-HST

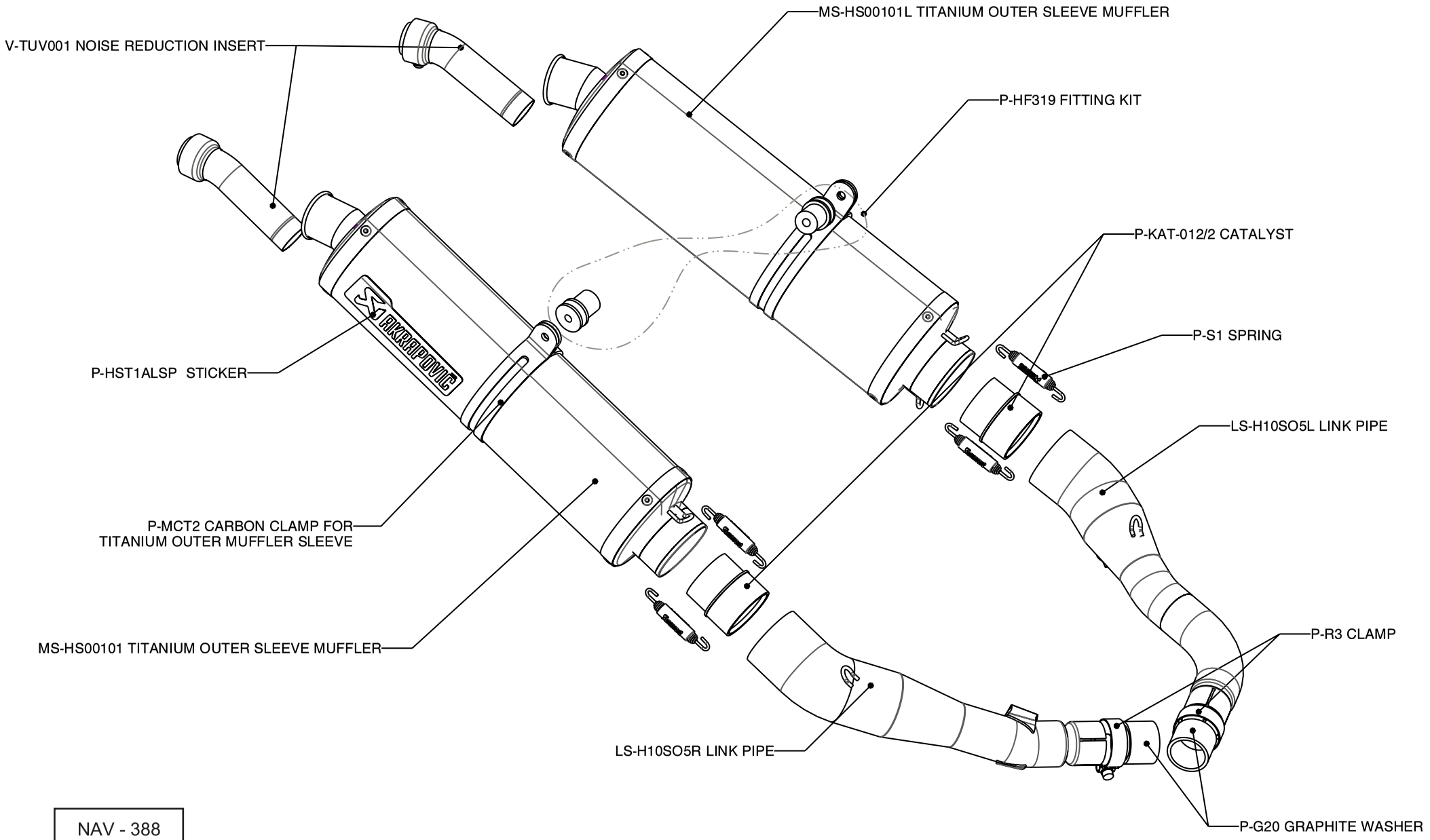

NAV - 388