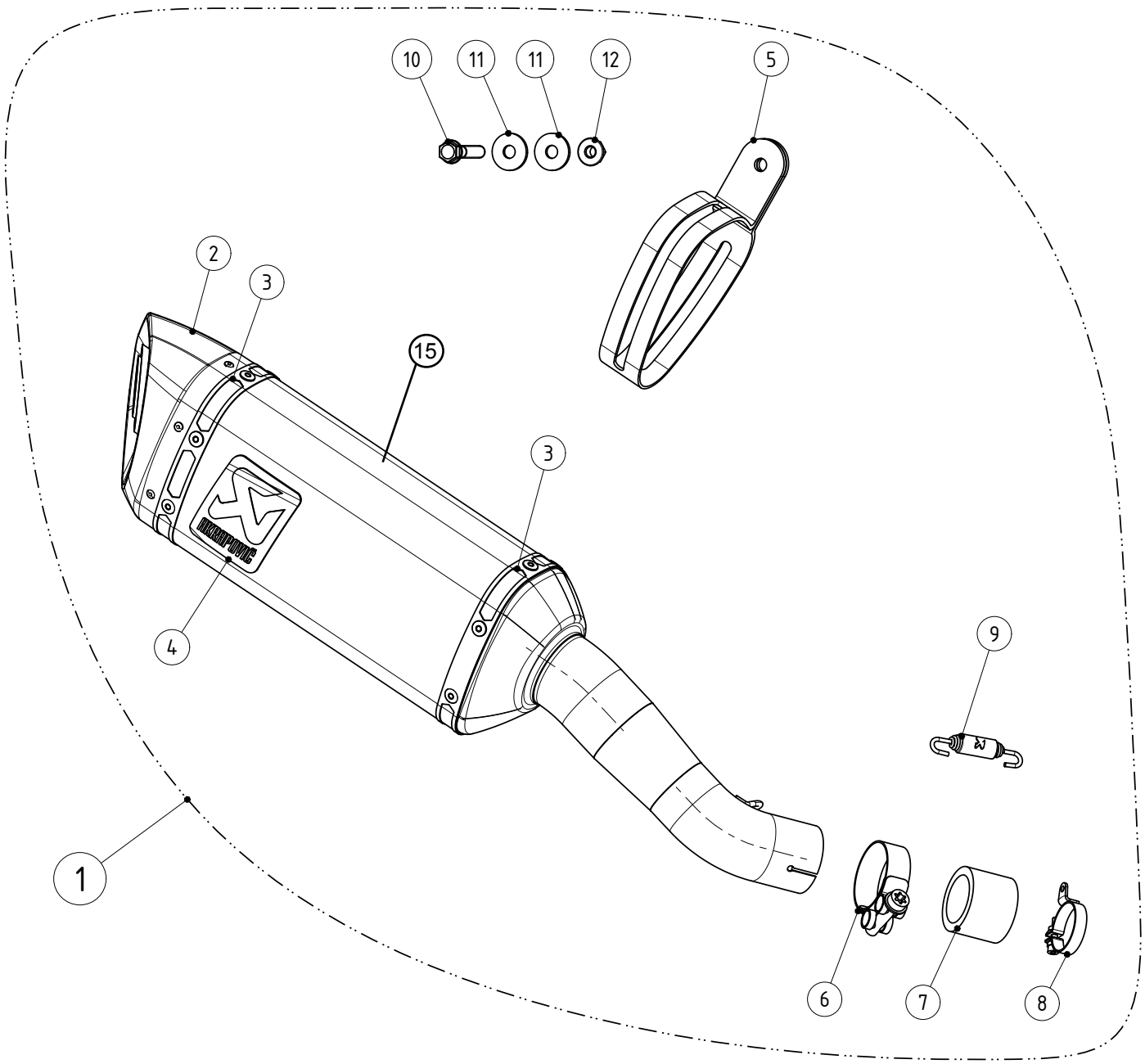

MUFFLER REPAIR KITS	
REPACK	13
SLEEVE	14

No.	SalesCode	Description	Qty.
1	S-Y2SO13-HAPC	slip on system	1
2	V-EC234	end cap CA	1
3	P-TT62	titanium tape	2
4	P-VST2AL	sticker	1
5	P-MCCAP7	muffler clamp	1
6	P-R47	clamp SS	1
7	P-HF1243	graphite gasket for YZF-R3	1
8	P-R107	clamp SS	1
9	P-S2/1	spring	1
10	P-FB23	bolt	1
11	P-DR4	washer SS	2
12	P-FN4	nut	1
13	P-RPCK127	muffler repack kit	1
14	P-RKS434AP250	muffler sleeve kit	1
15	M-HAP00702C	muffler	1
16	V-TUV168	insert SS	1