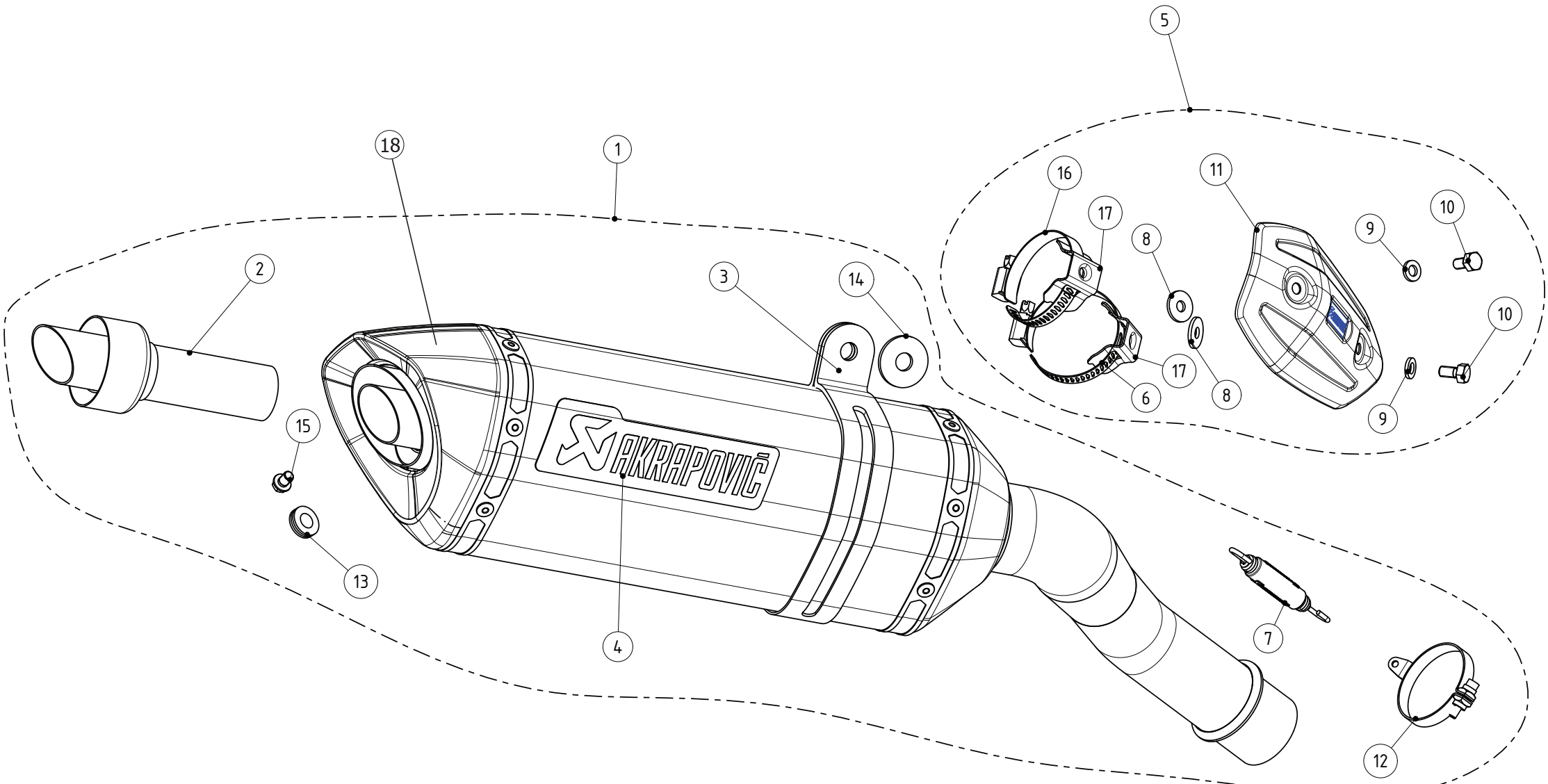

REPACK	19
SLEEVE	20

No.	SalesCode	Description	Qty.
1	S-K10SO14-HZC	slip on system	1
2	V-TUV098	insert SS	1
3	P-MCCZ33	muffler clamp	1
4	P-HST6AL	sticker	1
5	P-HSK10R4	heat shield CA	1
6	P-R30	clamp SS	1
7	P-S1	spring	1
8	P-DRH1/BAR316	heat resistant washer	2
9	P-DRH4/BAR316	heat resistant washer	2
10	P-FB44	bolt	2
11	P-HSD12R2	heat shield CA	1
12	P-R17	clamp SS	1
13	P-GUV004	rubber insert	1
14	P-DR64	washer SS	1
15	P-FBT5	bolt	1
16	P-R49	clamp SS	1
17	P-X89	clamp SS	2
18	V-EC95	end cap CA	1
19	P-RPCK142	muffler repack kit	1
20	P-RKS237ZC30	muffler sleeve kit	1