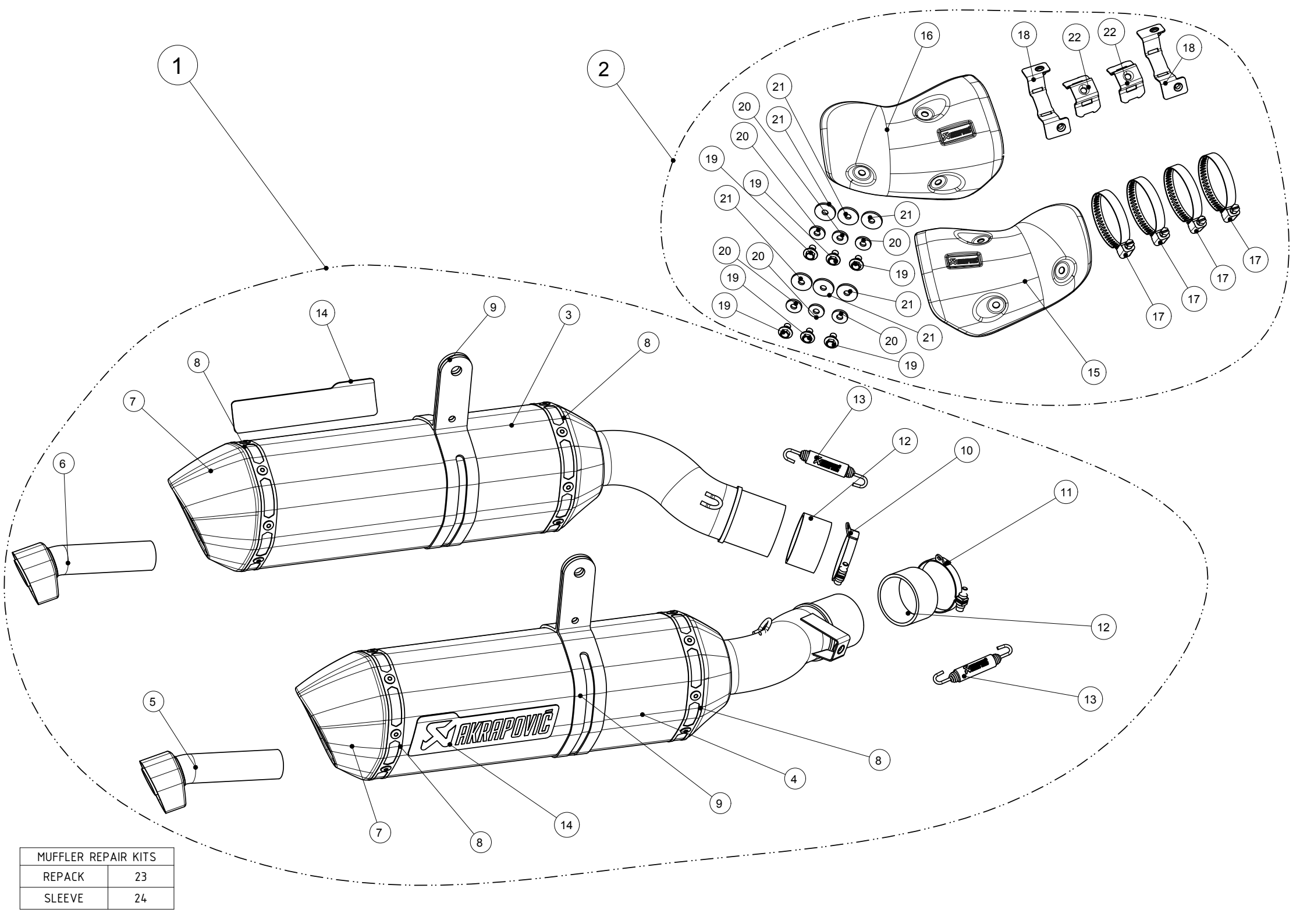

MUFFLER REPAIR KITS	
REPACK	23
SLEEVE	24

No.	SalesCode	Description	Qty.
1	S-K10SO9-HZT	slip on system@	1
2	P-HSK10R5	heat shield CA	1
3	M-HZ04202TL/2	muffler L TI	1
4	M-HZ04202T/2	muffler R TI	1
5	V-TUV052	insert SS	1
6	V-TUV052L	insert SS	1
7	V-EC27	end cap	2
8	P-TT18	belt TI for TI sleeve	4
9	P-MCTZ38	muffler clamp	2
10	P-R29L	clamp SS	1
11	P-R29D	clamp SS	1
12	P-G28	seal graphite	2
13	P-S1/2	spring	2
14	P-HST6AL	sticker	2
15	P-HSK10R5R	heat shield - right	1
16	P-HSK10R5L	heat shield - left	1
17	P-R30	clamp SS	4
18	P-X131	bracket SS	2
19	P-FB44	bolt	6
20	P-DRH4/BAR316	heat resistant washer	6
21	P-DRH1/BAR316	heat resistant washer	6
22	P-X89	bracket SS	2
23	P-RPCK81	muffler repack kit	1
24	P-RKS287ZT30	muffler sleeve kit	1