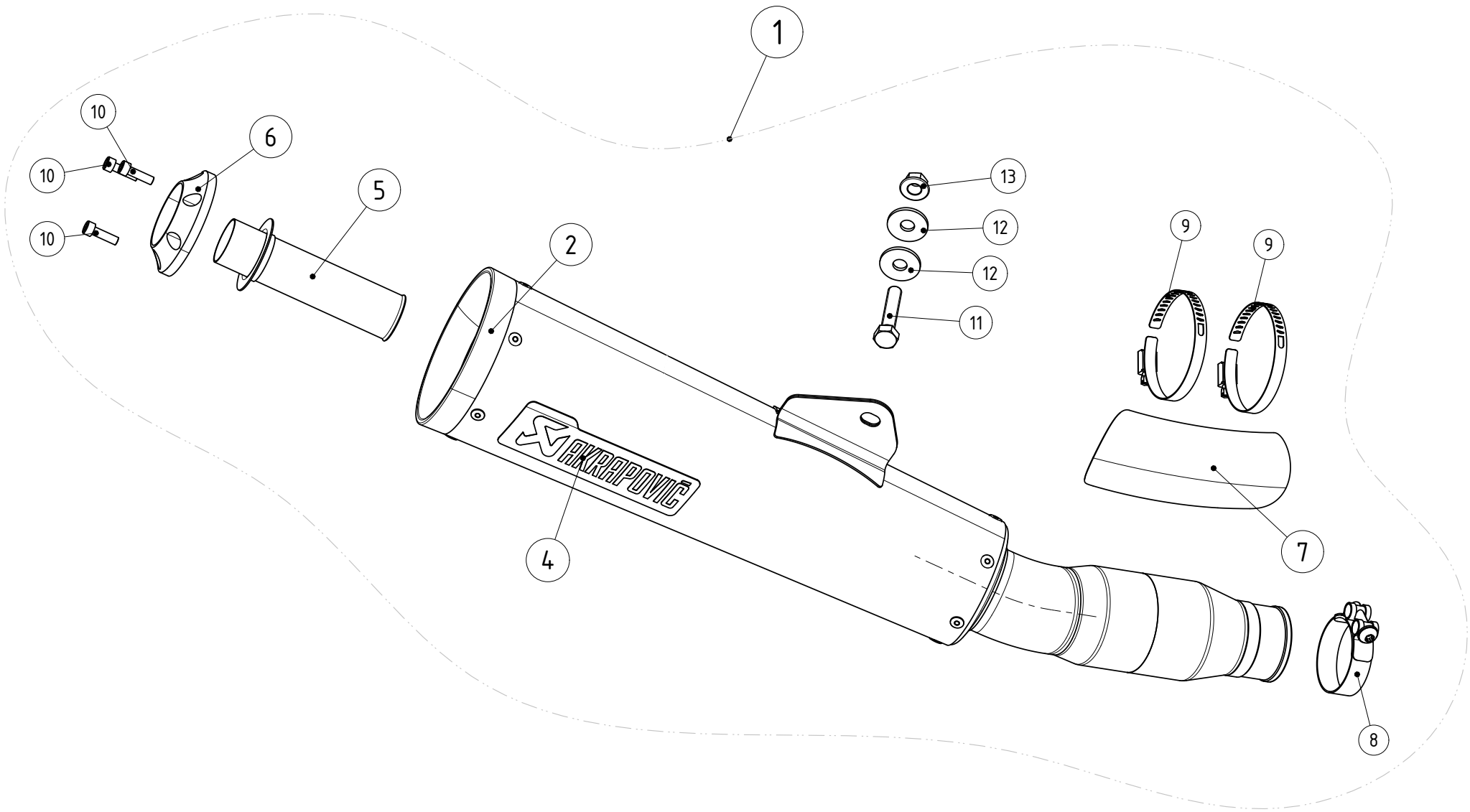

MUFFLER REPAIR KITS	
REPACK	14
SLEEVE	15

No.	SalesCode	Description	Qty.
1	S-Y13SO2-HBBOT	slip on system	1
2	V-EC204	end cap AL	1
4	P-HST2AL	sticker	1
5	V-TUV104	insert SS	1
6	P-HF710	insert ring@	1
7	P-HSYA13	heat shield ss	1
8	P-R32	clamp SS	1
9	P-R92	clamp ss	2
10	P-FB80	screw SS	3
11	P-FB70	bolt	1
12	P-DR64	washer SS	2
13	P-FN15	nut	1
14	P-RPCK90	muffler repack kit	1
15	P-RKS378BBOT410	muffler sleeve kit	1