Installation instructions:

350534

AKRAPOVIC SLIP-ON TWIN EXHAUST SYSTEM
for the
SUZUKI GSX-R1000 (2007-2008)

Congratulations on purchasing an Akrapovic exhaust system. Please read these installation instructions carefully. If you have any trouble installing the system please contact your authorized dealer!

IMPORTANT INFORMATION

Exclusion of Certain Liability

1. The manufacturer, importer or dealer shall not be liable for any incidental damage including personal injury or any other damages caused by improper installation or operation of the Akrapovic exhaust system. When installing the Akrapovic exhaust system be careful that the exhaust system does not touch other parts sensitive to high temperature.

2. Akrapovic makes no representation or warranties with regard to damage caused by the improper installation, use and maintenance of the Akrapovic exhaust system. The warranty is limited to defects recognized by our technical department and to normal use, and excludes items subject to normal wear (gaskets and damping wool). The guarantee is void in case of accident, modification, improper or competition use.

3. Do not attempt to install the Akrapovic exhaust system on a motorcycle for which it was not made or tested by Akrapovic.

4. When the exhaust system gets very hot during operation, be careful not to burn yourself on the exhaust system or parts which are in direct contact with it, even when the motor is not running. Also protect other people, especially children, from the injuries mentioned above.

5. In some cases Akrapovic exhaust system kits contain chemical products (ceramic anti-seizing grease; bolt sealant). Handle with care, do not inhale or swallow. Avoid excessive contact with skin, eyes or mucous membranes. Keep out of reach of children.

6. Technical specifications of Akrapovic exhaust systems and related products subject to change without notice.

Trademarks

The Akrapovic Exhaust System Technology logo is a registered trademark of Akrapovic d.d.

Akrapovic website

Information about Akrapovic exhaust systems and related products is available on the Akrapovic website at:
http://www.akrapovic.com/

Copyright

No part of the Akrapovic exhaust system or its documentation may be reproduced or distributed in any form or by any means without the prior written authorization of the Akrapovic company.

© Akrapovic, d.d. All rights reserved.

Symbols

The following symbols are used throughout these installation instructions:

! CAUTION OR WARNING	**INSTALLATION TIP**
TOOLS REQUIRED	**TIGHTENING TORQUE**



USE BOLT SEALANT; Apply 3 to 4 small drops of bolt sealant onto the cleaned and deagreased threads before tightening bolts. **WARNING!Avoid contact with skin, eyes and mucous membranes.Do not inhale fumes. Keep out of the reach of children.**



USE ANTI-SEIZING GREASE (white tube); Prevents seizing, corrosion and excessive wear between the titanium components of your exhaust system. **WARNING!Avoid eye contact.Avoid excessive skin contact.Keep out of the reach of children.**



USE ANTI-SEIZE LEAD-FREE COPPER PASTE (black tube); Provides trouble-free and long-lasting protection against seizing, corrosion and rusting of bolts, threaded ends, nuts, joints, etc.Also protects against vibration, wear and impact. **WARNING!Avoid eye contact.Avoid excessive skin contact.Keep out of the reach of children.**

INSTALLATION INSTRUCTIONS

BEFORE INSTALLING CHECK SCHEMATIC OF THE EXHAUST SYSTEM!

! IF ANY ITEMS IN THE AKRAPOVIC EXHAUST SYSTEM PACKAGE ARE MISSING PLEASE CONTACT YOUR AUTHORIZED DEALER. KEEP THE SCHEMATIC FOR FUTURE REFERENCE.

! THESE INSTALLATION INSTRUCTIONS MUST BE READ CAREFULLY IN ORDER TO ENSURE PROPER INSTALLATION AND OPERATION OF THE AKRAPOVIC EXHAUST SYSTEM.

! THE EXHAUST SYSTEM CAN BE EXTREMELY HOT. ALLOW THE MOTORCYCLE TO COOL DOWN BEFORE BEGINNING INSTALLATION.

WE ADVISE YOU TO LEAVE INSTALLATION TO A QUALIFIED SERVICEMAN. IMPROPER INSTALLATION MAY RESULT IN A SHORTER LIFETIME OF THE EXHAUST SYSTEM AND/OR DAMAGE TO THE MOTORCYCLE.

T-handle 12mm wrench
T-handle 4mm three hexagon key wrench
T-handle 5mm three hexagon key wrench
Combination 12mm wrench
Spring puller

REMOVAL OF STOCK EXHAUST SYSTEM:

1. Put the motorcycle on a side stand, we recommend a racing stand. Make sure, that surface is solid and flat.
2. Unscrew the right lower cowling bolt **(Figure 1, 2)** and the bolts from the metal clamp at the muffler - collector joint and muffler sub-frame brackets.Remove the muffler. Perform the process on both sides of the motorcycle **(Figure 3, 4, 5).**



Figure 1



Figure 2



Figure 3



Figure 4



Figure 5

3. Remove and reverse the metal collar on the stock muffler bracket. Perform the process on both sides of the motorcycle **(Figure 6, 7).**



Figure 6



Figure 7

IN CASE OF OPTIONAL Y-LINK PIPE ONLY: REMOVAL OF STOCK COLLECTOR:

4. Remove the lower and the middle parts of the cowling. **(Figure 8, 9, 10, 11).**



Figure 8



Figure 9

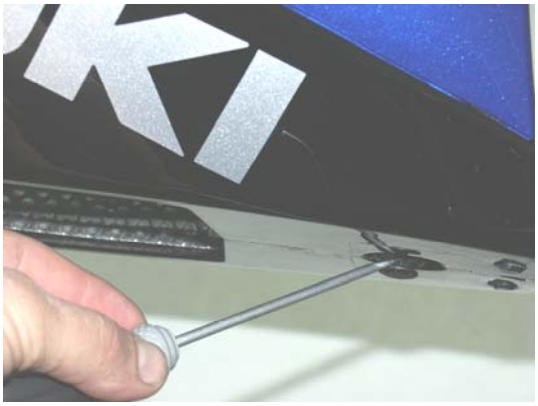

Figure 10



Figure 11

5. Untighten the bolt of the stock metal clamp **(Figure12).** Unscrew the lambda sensor **(Figure13).** Unscrew all bolts from stock collector brackets **(Figure14)** , and remove the collector **(Figure15).** Unscrew and remove the both collector brackets **(Figure 16, 17).** Remove the metal collars from the stock collector brackets **(Figure 18, 19).**



Figure 12



Figure 13



Figure 14



Figure 15



Figure 16



Figure 17



Figure 18

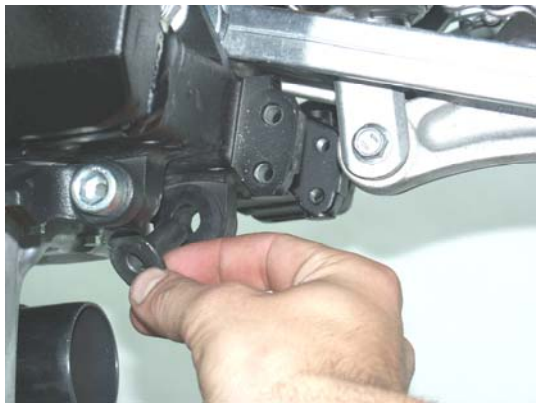

Figure 19

INSTALLATION IN CASE OF OPTIONAL Y-LINK PIPE ONLY:

1. Slide the Y-link pipe onto the stock collector **(Figure 20).** Tighten the metal clamp at the Y-link pipe – stock collector connection and lambda sensor **(Figure 21).** Make sure the link pipe is not touching the frame and other parts.



Figure 20

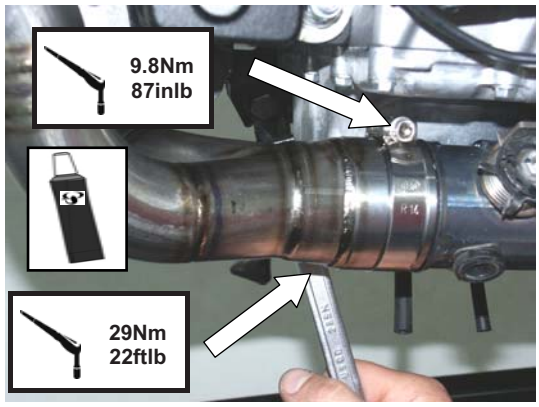

Figure 21

INSTALLATION OF THE AKRAPOVIC SLIP-ON TWIN EXHAUST SYSTEM:

2. Install the Akrapovic metal clamps onto the Akrapovic independent link pipes **(Figure 22, 23).** Slide the link pipes onto the stock collector **(Figure 24).** Correctly position the carbon-fiber clamp and slide it onto the muffler - bear in mind **the left offset** of the carbon-fiber clamp viewed from the rear for right side and **the right offset** for the left side. WARNING: open the clamp to slightly wider than the diameter of the outer sleeve of the muffler – do not scrape it along the muffler outer sleeve! **(Figure 25). For titanium independent link pipes only:** coat the interior side of the input of the muffler with Akrapovic ceramic anti-seizing grease (white tube). Position the muffler correctly and slide it onto the outlet side of the link pipe.Hand tighten the carbon-fiber clamp onto the stock bracket. **(Figure 26, 27).** Position and attach the springs **(Figure 28).** Tighten the metal clamp at the independent link pipe – stock collector connection **(Figure 29).** Tighten the bolt on the carbon-fiber clamp/stock muffler bracket joint **(Figure 30).** Make sure the link pipes or mufflers are not touching the frame and other parts. Perform the process on both sides of the motorcycle.



Figure 22



Figure 23



Figure 24



Figure 25

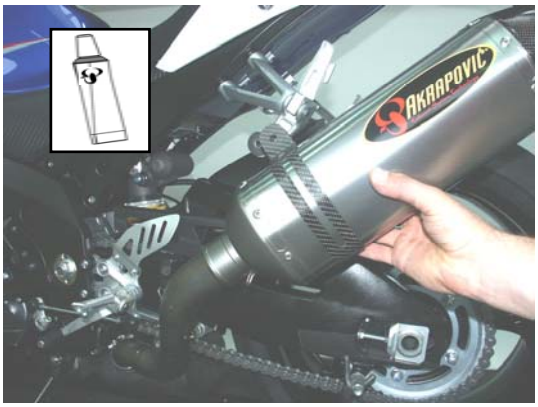

Figure 26



Figure 27



Figure 28

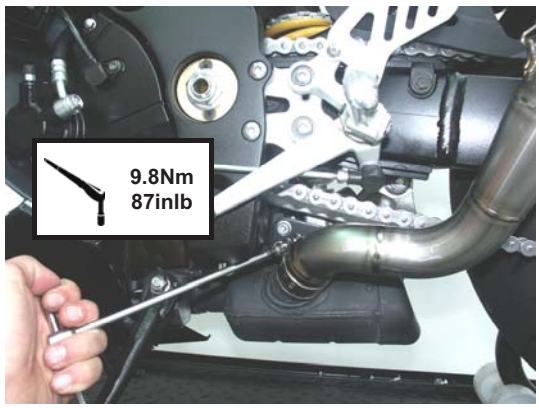

Figure 29

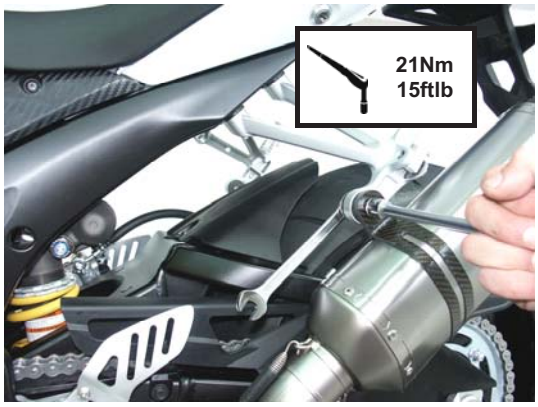

Figure 30

final installation:

1. Clean grease spots:
    a. Muffler – carbon-fiber outer sleeve: use a soft dry cloth.
    b. Muffler – titanium outer sleeve: use a soft cloth sprayed with a multi-purpose spray lubricant (WD-40 or equivalent).
    c. Muffler – carbon-fiber outlet cap: use a soft dry cloth.
    d. Titanium link pipes: use a soft cloth sprayed with a multi-purpose spray lubricant (WD-40 or equivalent).
    e. Stainless steel link pipes: use a soft cloth sprayed with a contact cleaner, then wipe with a soft dry cloth
    f. Stainless steel optional Y-link pipe: use a soft cloth sprayed with a contact cleaner, then wipe with a soft dry cloth
    g. Titanium optional Y-link pipe: use a soft cloth sprayed with a multi-purpose spray lubricant (WD-40 or equivalent).

Cleaning will prevent spots from burning onto the surface. Do not use aggressive chemical cleaners, because they can damage the sticker.

Position of the correctly installed Akrapovic **SLIP-ON TWIN** system **(Figure 31).**



Figure 31

2. **Check the operation of the brakes and suspension. Make sure all the bolts are sufficiently tightened. In case the exhaust system touches the cowling or other parts repeat the adjustment of the exhaust system or contact your authorized dealer.**

! IT IS NORMAL IF WHITE SMOKE COMES OUT OF THE MUFFLER ON FIRST OPERATION.

! DO NOT STAND BEHIND THE MUFFLER ON FIRST OPERATION.

! DO NOT USE AUTOMOTIVE WHEEL CLEANERS OR ANY CLEANING PRODUCTS WHICH CONTAIN ACIDIC ADDITIVES TO CLEAN AKRAPOVIC EXHAUST SYSTEMS.

MAINTENANCE OF THE AKRAPOVIC EXHAUST SYSTEM

1. Clean the titanium exhaust components with a multi-purpose spray lubricant (WD-40 or equivalent), carbon fiber exhaust components with soft and dry cloth and stainless steel components with soft cloth sprayed with contact cleaner, then wipe with soft and dry cloth. Do not use aggressive chemical cleaners, because they can damage the sticker. A change in the color of the exhaust system is normal due to the high temperatures.
2. The wearing out of the muffler silencing material depends on the type of the engine and riding style. Contact your dealer/serviceman if visible changes appear on muffler's outer sleeve or the noise level is increased.
3. Periodically make sure all the bolts and springs are sufficiently tight.

SUZUKI GSX-R 1000/ SLIP ON exhaust system/ OPEN , model year: 2007 - 2008

Product code: S-S10SO3-ZT
S-S10SO3-ZC
S-S10SO3T-ZT
S-S10SO3T-ZC

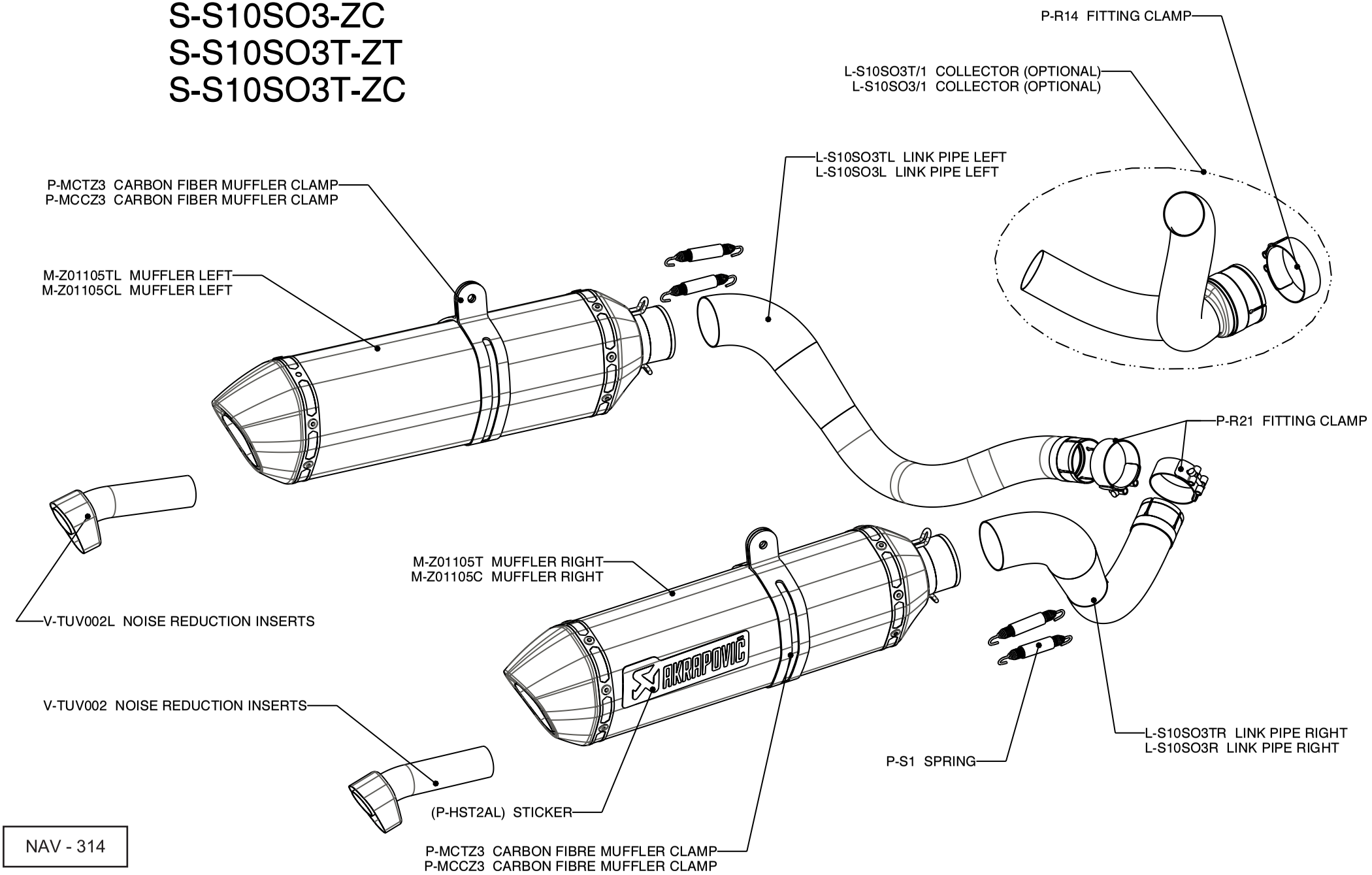

NAV - 314

SUZUKI GSX-R 1000/ SLIP ON exhaust system, homologated, model year: 2007 - 2008

Product code: S-S10SO3T-HZT
S-S10SO3T-HZC
S-S10SO3-HZT
S-S10SO3-HZC

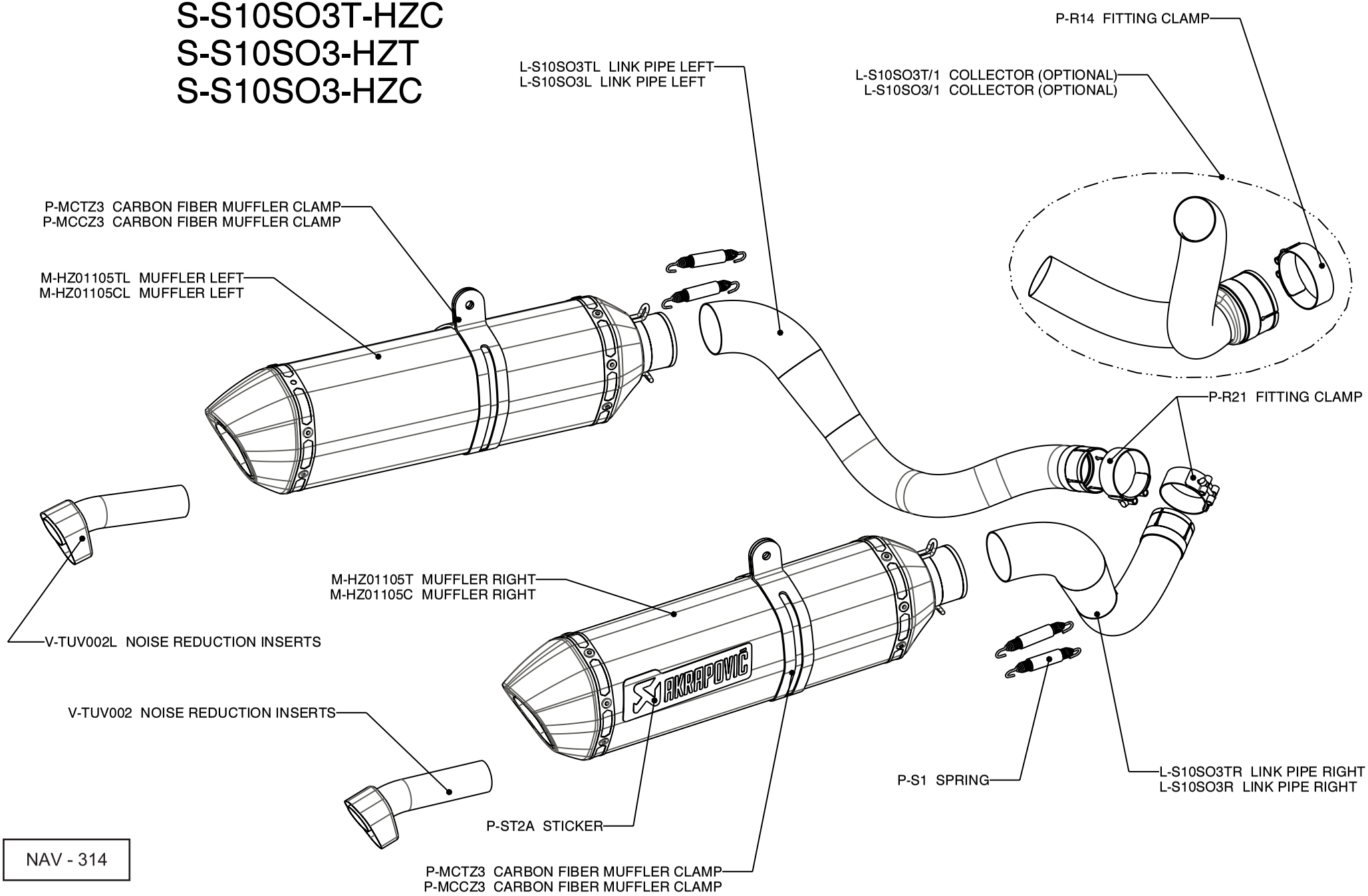

NAV - 314

SUZUKI GSX-R 1000/ Complete exhaust system/ Racing line tube set with street legal Slip-on mufflers, model year: 2007 - 2008
SUZUKI GSX-R 1000/ Complete exhaust system/ Evolution line tube with street legal Slip-on mufflers, model year: 2007 - 2008

Product codes: S-S10R6-ZC/1
S-S10R6-ZT/1
S-S10RFT6T-ZC/1
S-S10RFT6T-ZT/1

WARNING! IN CASE OF COBINATION WITH RACING OR EVOLUTION TUBE SET, THE SLIP-ON HOMOLOGATION IS NOT VALID!

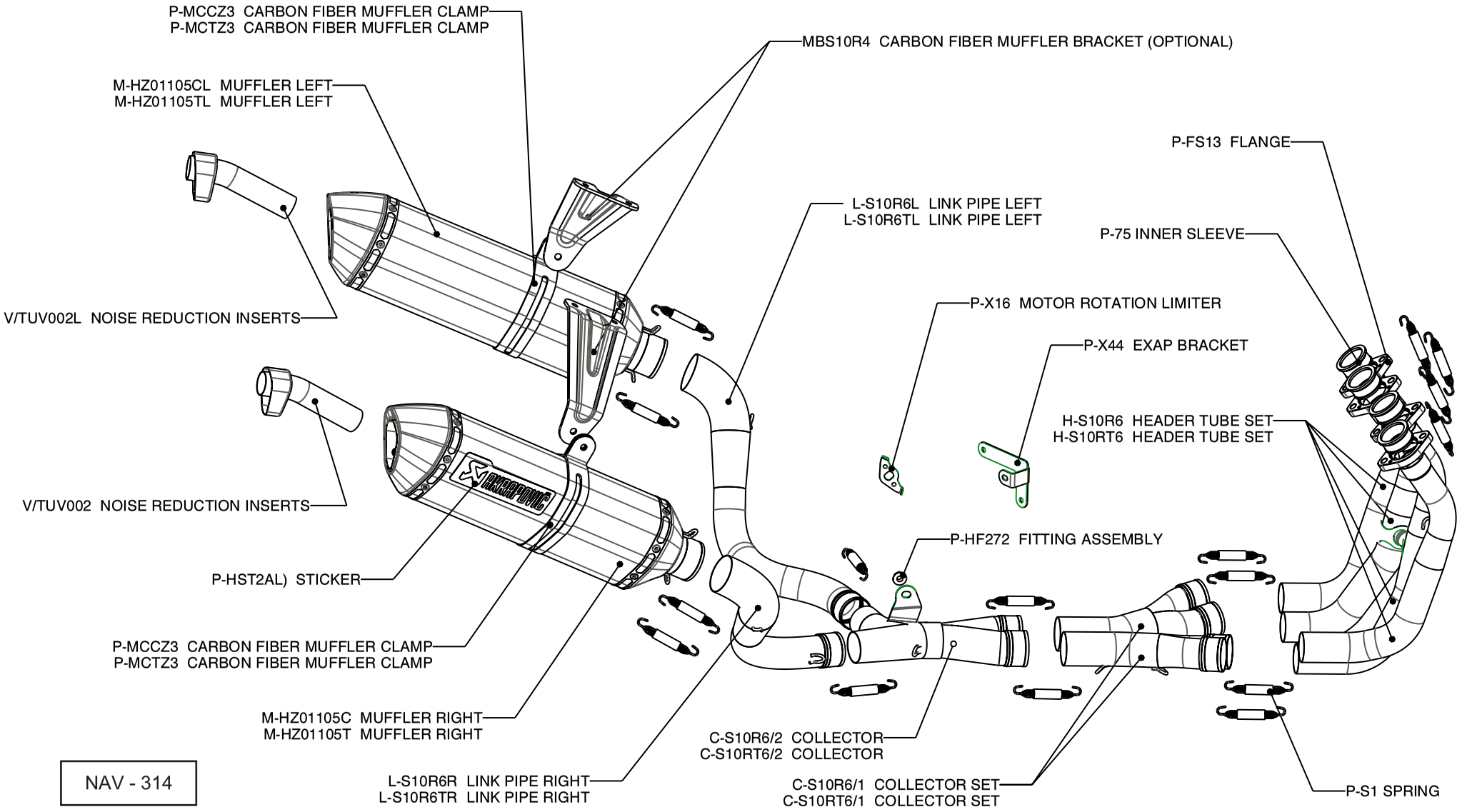

NAV - 314

WARNING:

Please note that certain aftermarket exhaust systems may not comply with applicable California laws and regulations, and may therefore be prohibited for use on California highways or roads, or on roads or vehicles otherwise subject to emissions control requirements.

Akrapovič exhaust systems for automobiles and motorcycles mounted downstream of the catalytic converter (also known as “cat-back systems”) are considered “replacement parts” in California by the California Air Resources Board (CARB), and do not require an exemption or executive order from CARB to be sold in California. However, California prohibits the use of any aftermarket exhaust system that modifies, removes or replaces original equipment catalysts, unless CARB has issued an Executive Order as to such part or system.

Further, Akrapovič parts or exhaust systems used or intended for use on “racing vehicles” (i.e. a competition vehicle used exclusively for competition on closed-course circuits) do not require an exemption or Executive Order from CARB to be sold in California. However, such parts are prohibited from use on California public highways or roads, even if occasionally used “off-road.”