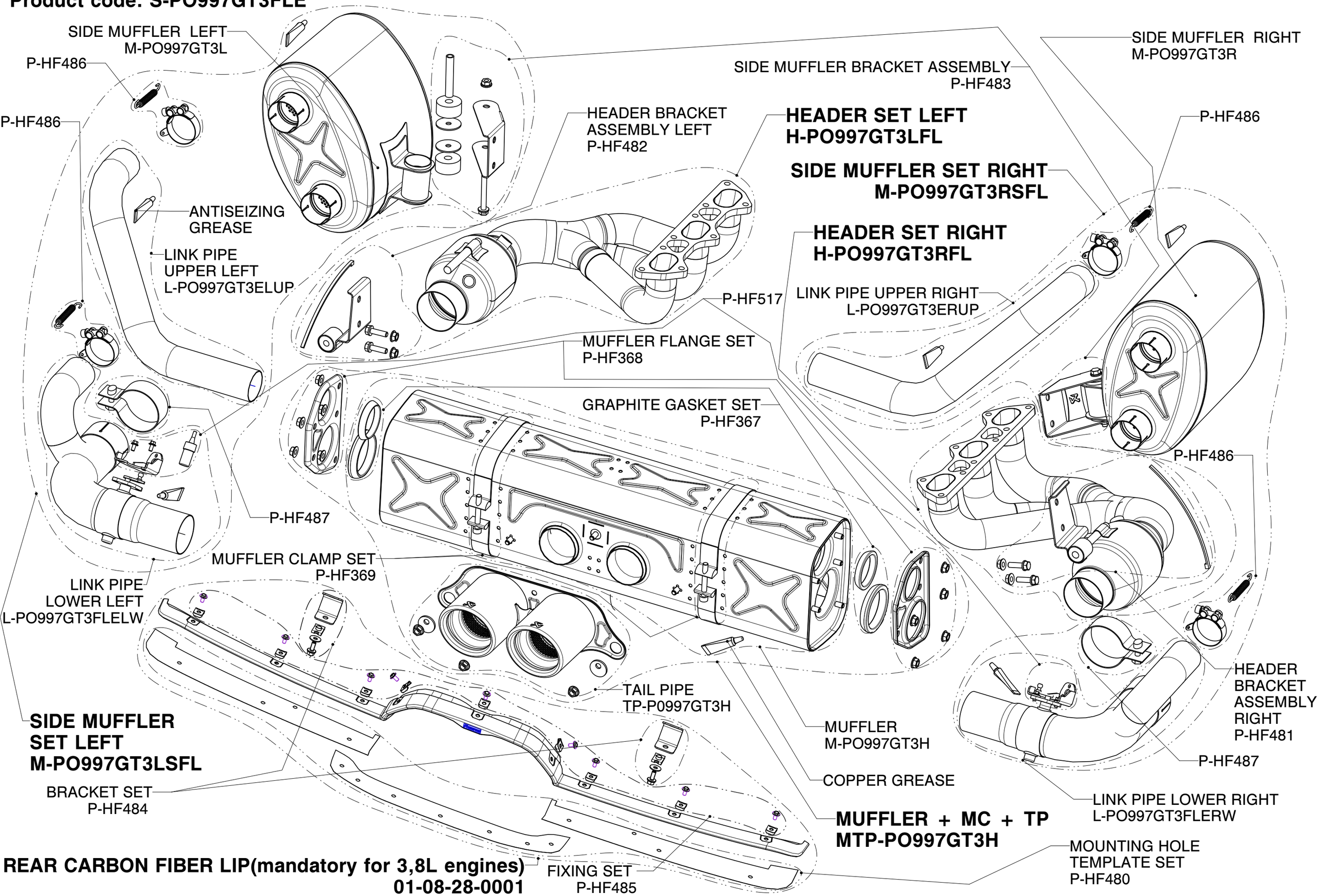PORSCHE 911 GT3/RS 3.8L, type 997 Titanium exhaust system / "EVOLUTION" version
Product code: S-PO997GT3FLE