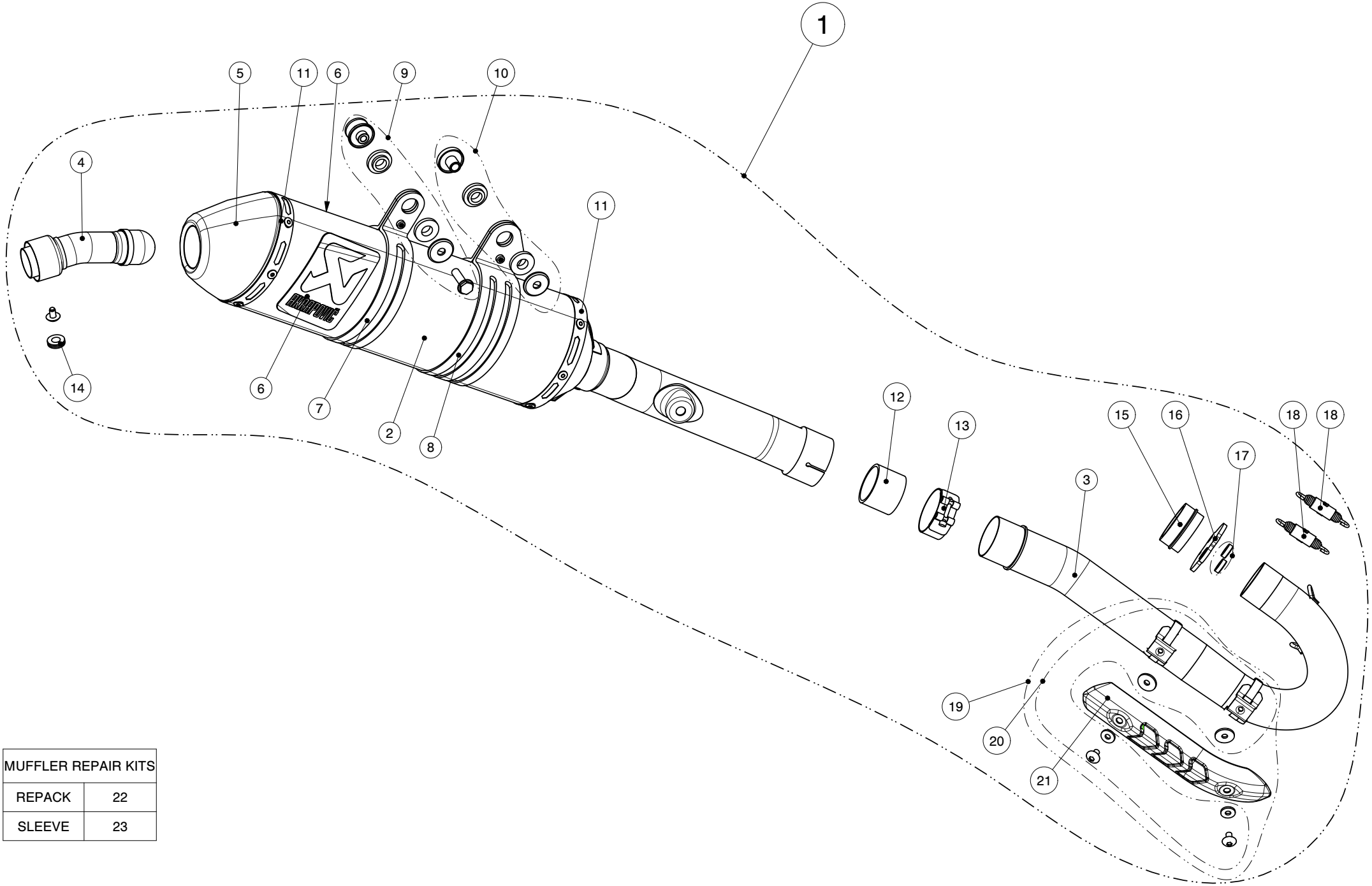

MUFFLER REPAIR KITS	
REPACK	22
SLEEVE	23

No.	SALES CODE	DESCRIPTION	QTY.
1	S-S4MR8-DTA	S SU RMX Z450 R 10-11 MSTT	1
2	M-S4SO7-DTA	M SA S45D3 T420/45 T45D15 RMXZ450 10-11	1
3	H-S4MR7	HE SS D42/45 SU RMX Z450 R 10-11	1
4	P-SA004	vložek ses. SA004 SS D32/28/43/35,6/19°	1
5	V-EC132	SRO zad. TI D15 D45 za SU RMX-Z450 10	1
6	P-VST1AL	nalepka Akrap. VER 95 AL	1
7	P-MCTD35	MC CA D TI 10/18/100/32 TD35	1
8	P-MCTD41	MC CA D TI 10/18/100/50 TD41	1
9	P-HF466	montažni set CRF250 10	1
10	P-HF289	montažni set YA WR 450F SO 07 M	1
11	P-TT44	trak zak. TI L=365 S=16 D TI TT44 izs	2
12	P-G28	tesnilo GRAFIT D51/D45,3×28 G28	1
13	P-R10	objemka SS D53,2×16 M6×30	1
14	P-GUV004	gumi vložek D18 nased-D13 logotip	1
15	P-52	puša gl.SS D42,5/49,5×23 RMZ45 05-11P-52	1
16	P-F37	prirob. SS D46,2/61 SU RMZ450 08-11 F37	1
17	P-HF477	montažni set SU RMX Z450 10-11 puša dis	1
18	P-S2	vzmet SS D10×60 Tip1 z zašc. gumo S2	2
19	P-HSS4M3/A1	montažni set SU RMX Z450 10-11 HS+pritrd	1
20	P-HF240	montažni set KTM SXF/AP RXV,SXV 07-11 HS	1
21	P-HSS4M3	HS CA KA KX250F/HO CRF250R E,R 04-09	1
22	P-RPCK13	MMRCK tip 13	1
23	P-RKS289DT42	MRRSK tip 289	1