SUZUKI RMX 450 Z, SLIP-ON exhaust system (with Spark arrester)
Product code: S-S4SO7-DTA

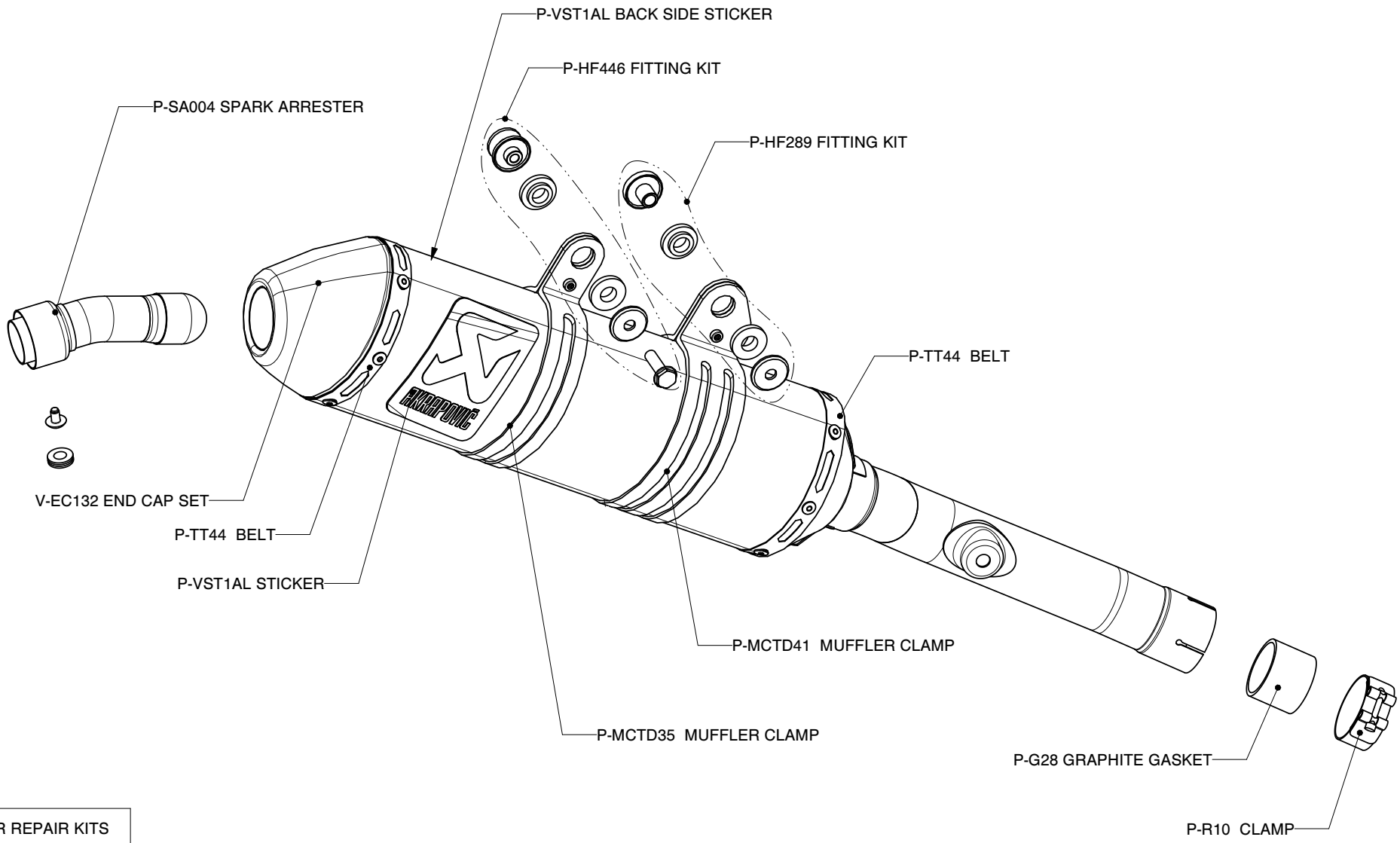

MUFFLER REPAIR KITS	
KIT	Part Nr.
REPACK	P-RPCK13
SLEEVE	P-RKS289DT42