SUZUKI RM 250 Z, Complete exhaust system / EVOLUTION LINE (Spark arrester)
Product code: S-S2MET1-QTA

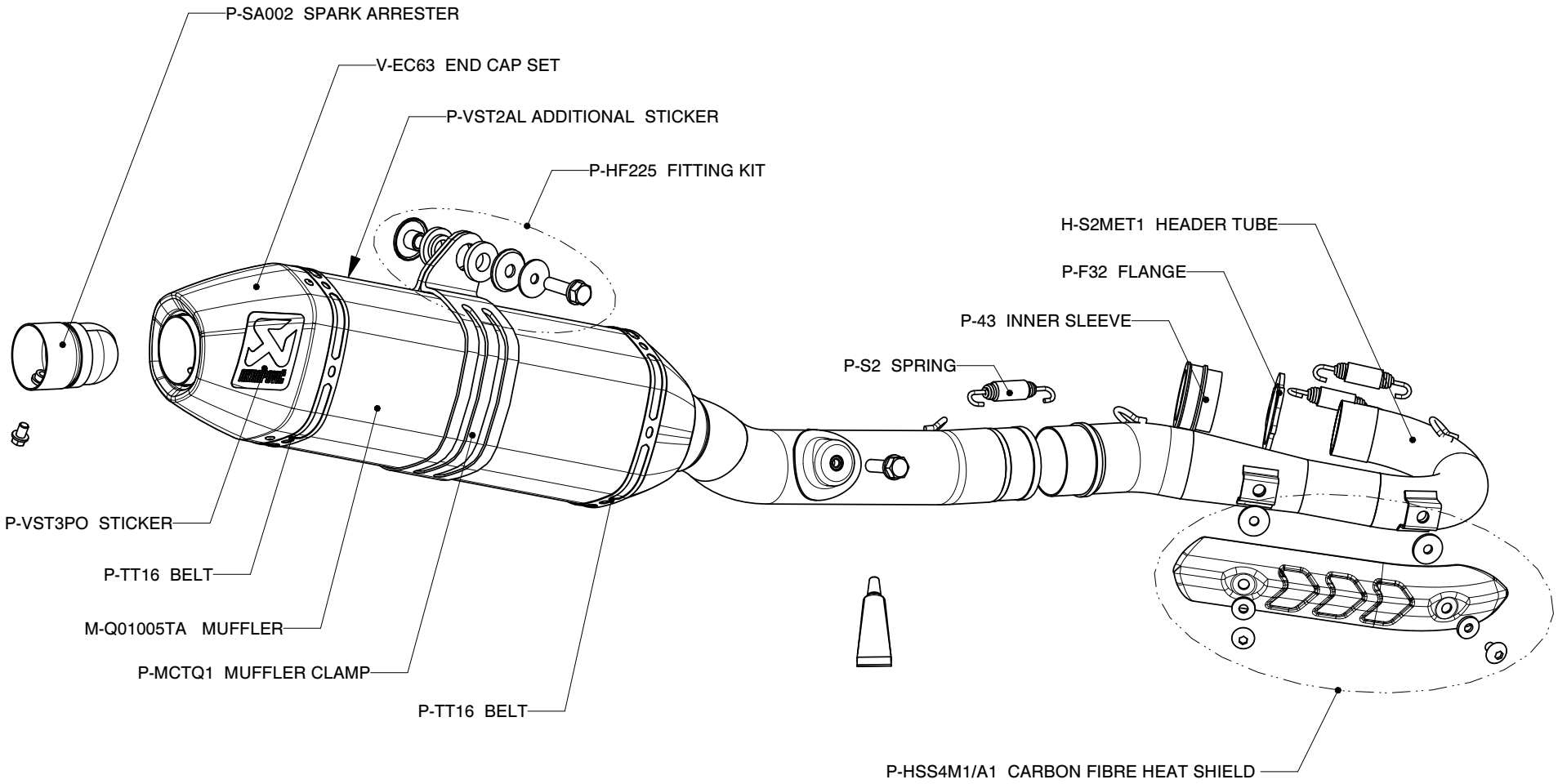

MUFFLER REPAIR KITS	
REPACK	P-RPCK7
SLEEVE	P-RKS87QT30