KAWASAKI Z 1000, SLIP-ON exhaust system / Street legal
Product code: SS-K10SO1-HDT
SS-K10SO1-HDC

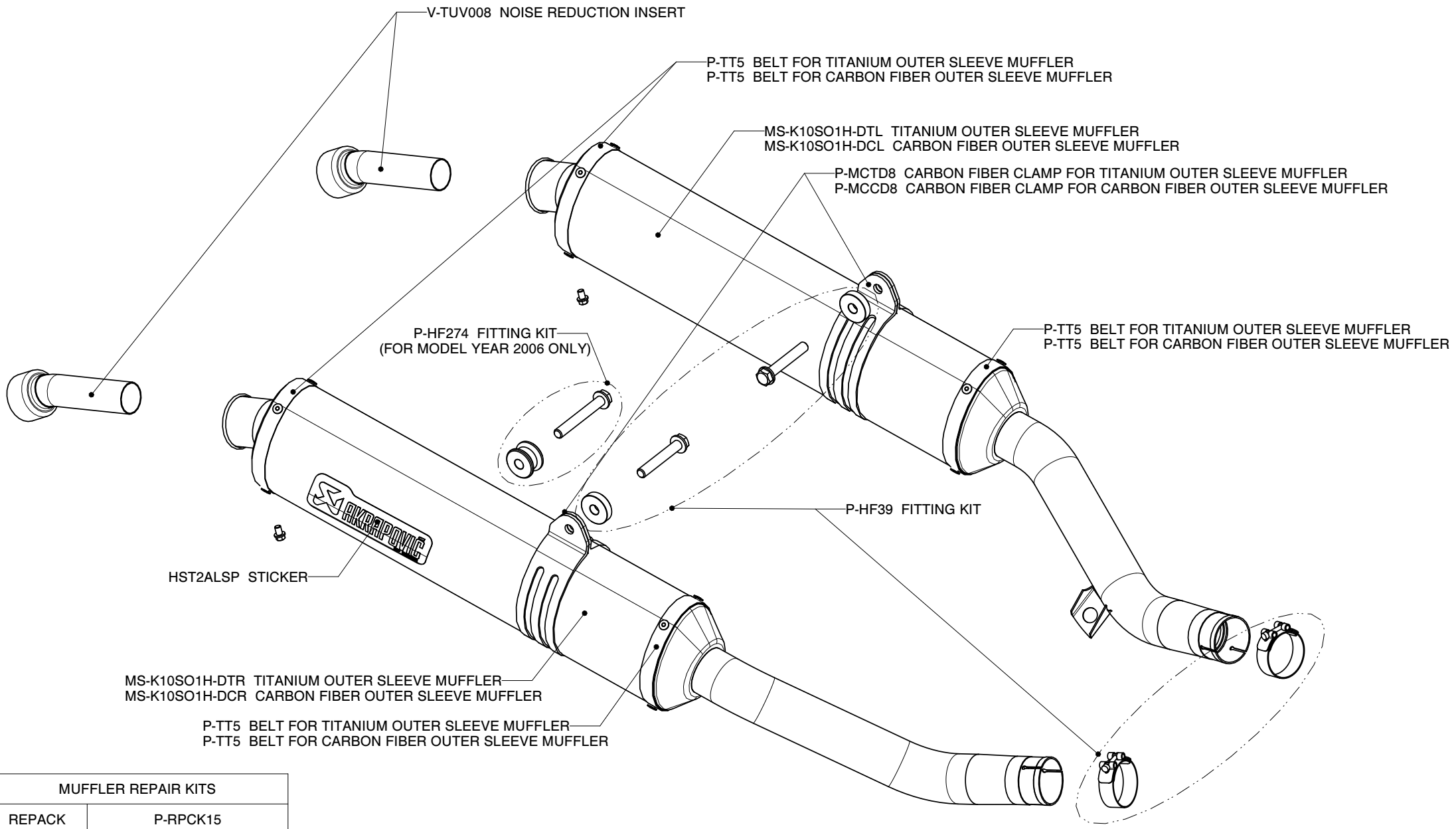

MUFFLER REPAIR KITS	
REPACK	P-RPCK15
SLEEVE	P-RKS57TD42 - TITANIUM P-RKS57CD42 - CARBON