SUZUKI GSX-R1000/ Bolt-on exhaust system / Street legal
Product code: S-S10BO1-HC
S-S10BO1-HT

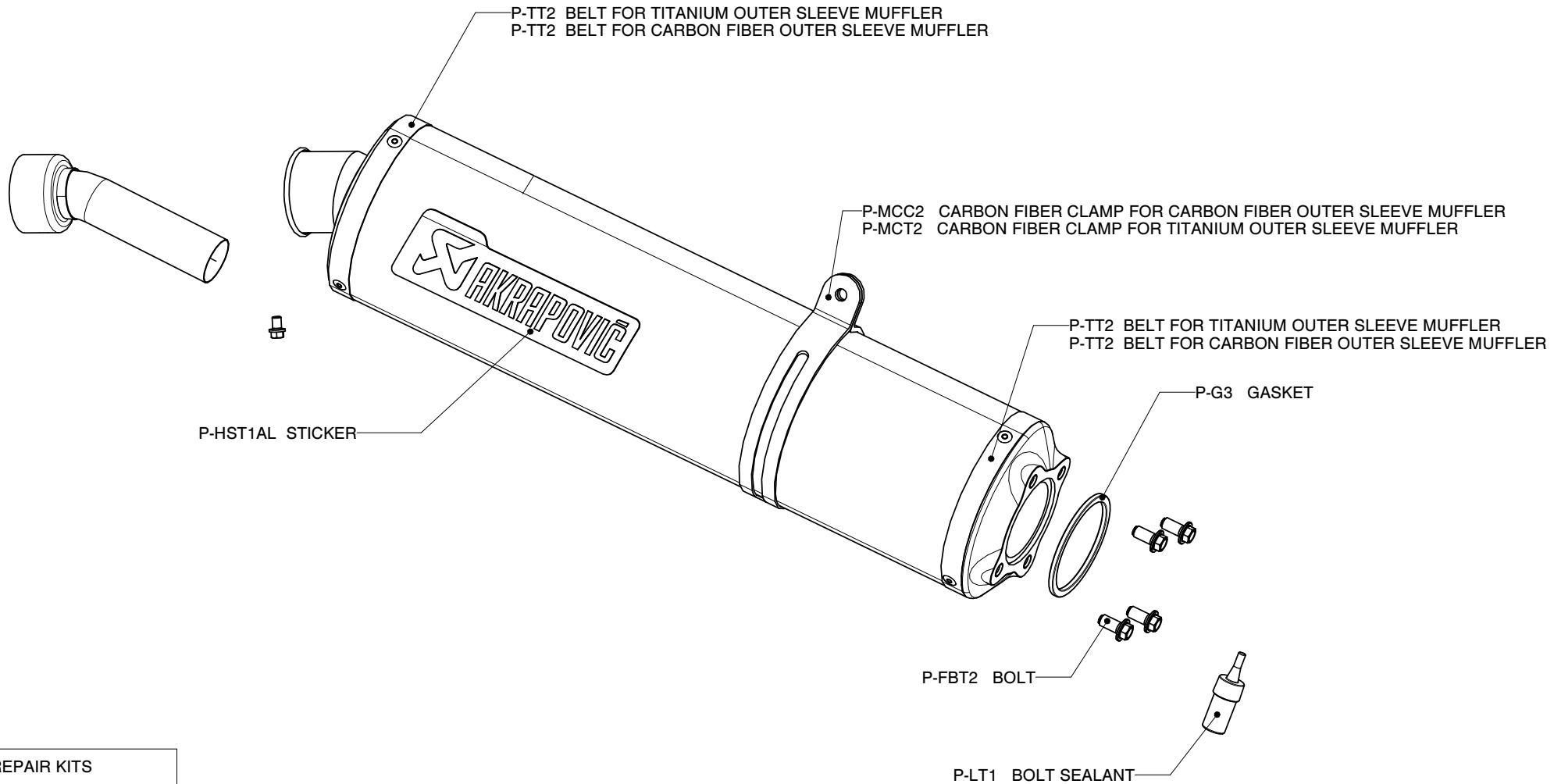

MUFFLER REPAIR KITS	
REPACK	P-RPCK12
SLEEVE	P-RKS45C47 - TITANIUM P-RKS45T47 - CARBON